SPARK STEEL FRAME DOUBLE STOREY BUILDING INSTALLATION SAMPLE

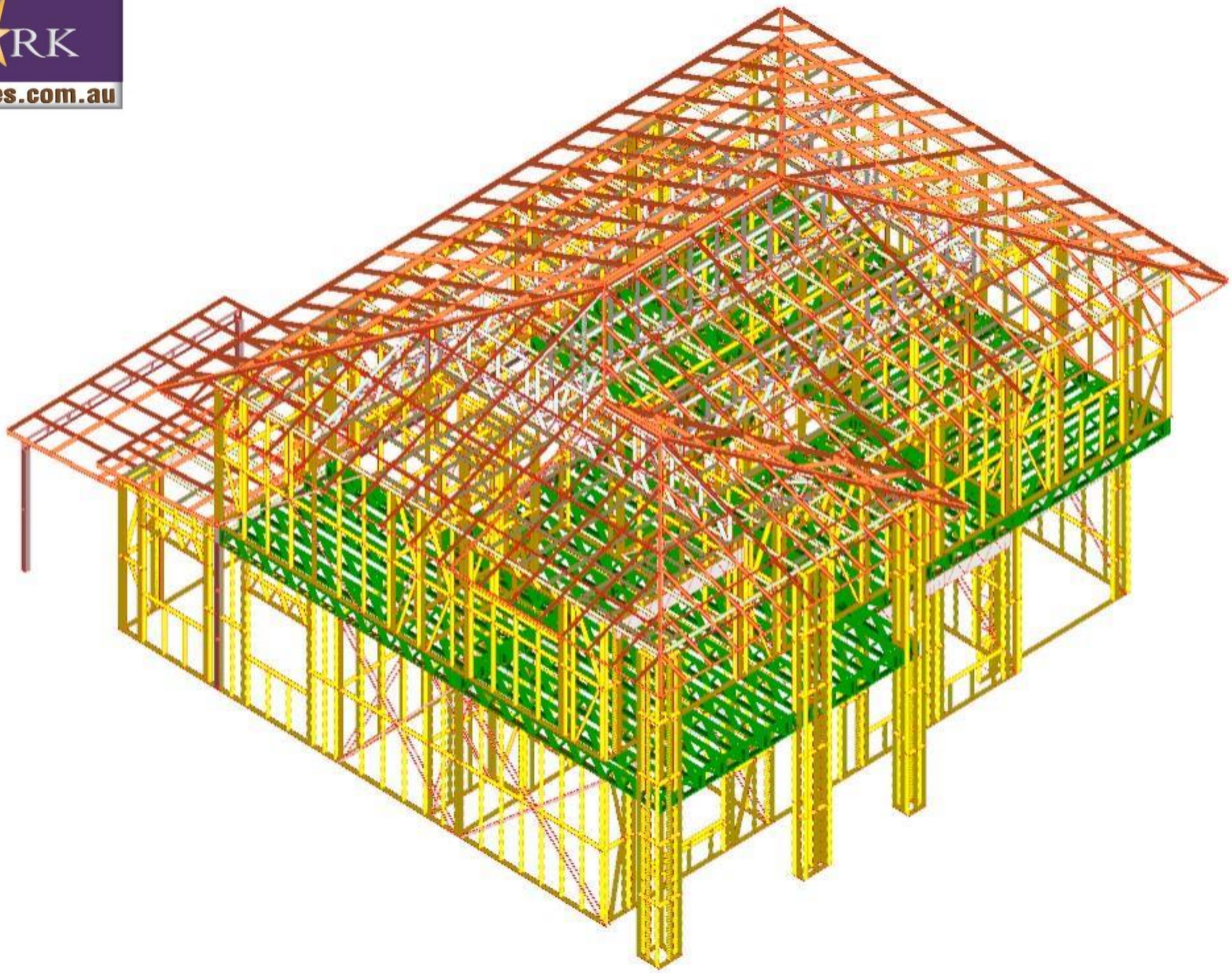

WWW.SPARKBUSINESSGROUP.COM.AU

SPARK BUSINESS GROUP PTY LTD
U3,13 McCormack Street
Ardell Park, NSW Tel: 0288 074717

****DO NOT SCALE****
CHECK ALL DIMENSIONS & LEVELS TO ARCHITECTURAL DRAWINGS BEFORE SET OUT OR ONSITE ERECTION. THESE LAYOUTS ARE TO BE READ IN CONJUNCTION WITH THE SCOTTSDALE CONSTRUCTION SYSTEMS MANUAL AND ANY OTHER CONSTRUCTION DETAILS PROVIDED.

Cover Map

Date	DRAWN
18/05/21	Michael Stogryn

Rev	Date	Amendments
1	18-May-2021	
2		
3		
4		
5		
6		
7		

Current Revision: 1

Page Number: Page 1

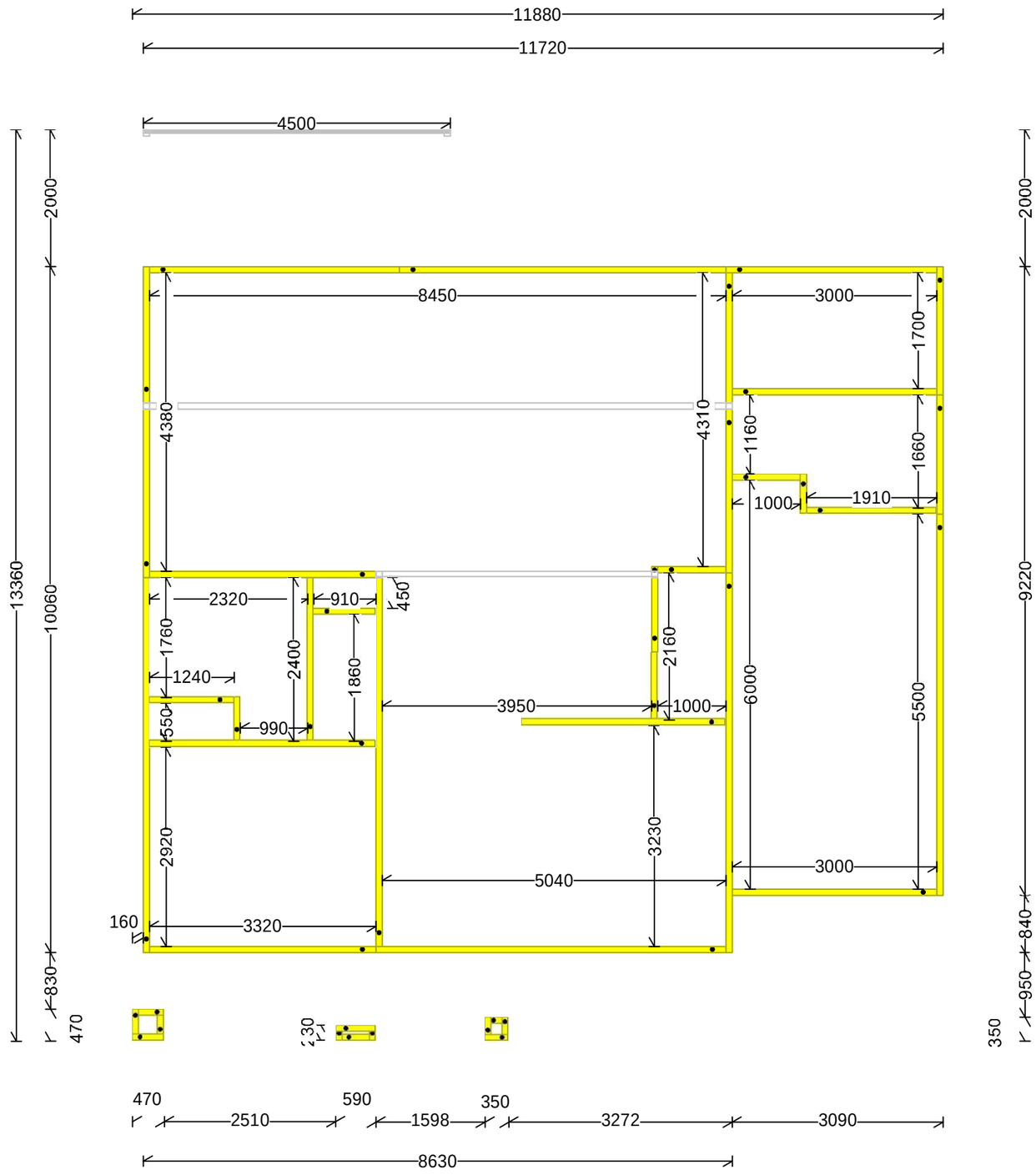
11880
11720
4500
2000
2000
13360
10060
830
470
8450
3000
1700
4380
4310
1160
1660
1000
1910
2320
910
450
1760
2400
1860
2160
1240
3950
1000
6000
5500
550
990
2920
3230
3000
5040
160
3320
840
950
350
230
470
2510
590
1598
350
3272
3090
8630

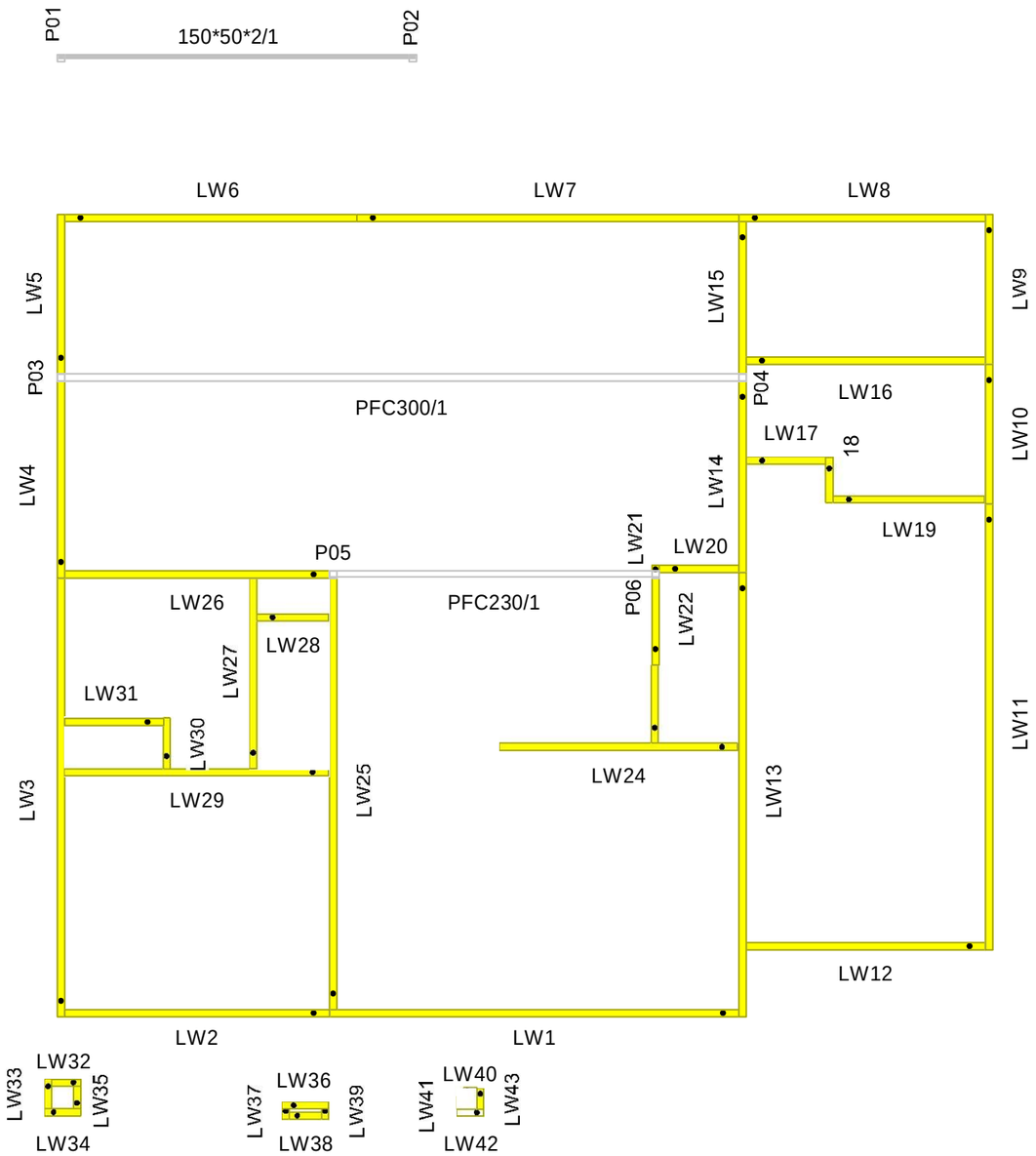

WWW.SPARKBUSINESSGROUP.COM.AU

SPARK BUSINESS GROUP PTY LTD
U3,13 McCormack Street
Ardell Park, NSW Tel: 0288 074717

****DO NOT SCALE****
CHECK ALL DIMENSIONS & LEVELS TO ARCHITECTURAL DRAWINGS BEFORE SET OUT OR ON SITE ERECTION. THESE LAYOUTS ARE TO BE READ IN CONJUNCTION WITH THE SCOTTSDALE CONSTRUCTION SYSTEMS MANUAL AND ANY OTHER CONSTRUCTION DETAILS PROVIDED.

Walls L1

Date	DRAWN
18/05/21	Michael Stogryn

Rev	Date	Amendments
1	18-May-2021	
2		
3		
4		
5		
6		
7		

Current Revision: 1

Page Number: Page 3

Windows (Level 1)				
Label	Width	Height	Top	Count
W1	1260	1860	2430	2
W2	1260	1260	2161	2
W3	1860	1860	2430	1
W4	1860	660	2430	2

Doors (Level 1)			
Label	Width	Height	Count
D1	2790	2430	1
D2	2410	2430	1
D3	920	2410	2
D4	1400	2430	1
D5	880	2400	2
D6	780	2400	4
D7	1240	2400	1
D8	900	2430	1

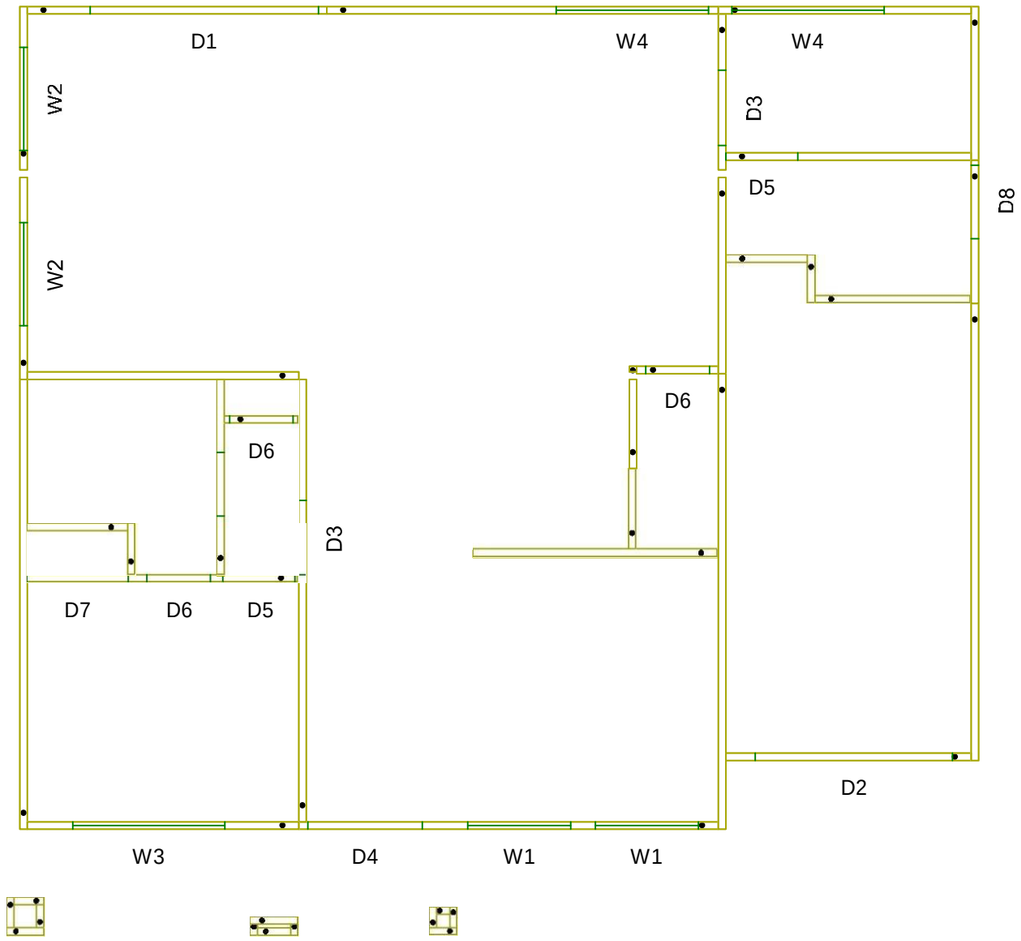

WWW.SPARKBUSINESSGROUP.COM.AU

SPARK BUSINESS GROUP PTY LTD
U3,13 McCormack Street
Ardell Park, NSW Tel: 0288 074717

DO NOT SCALE
CHECK ALL DIMENSIONS & LEVELS TO ARCHITECTURAL DRAWINGS BEFORE SET OUT OR ONSITE ERECTION.THESE LAYOUTS ARE TO BE READ IN CONJUNCTION WITH THE SCOTTSDALE CONSTRUCTION SYSTEMS MANUAL AND ANY OTHER CONSTRUCTION DETAILS PROVIDED.

Openings L1

Date	DRAWN
18/05/21	Michael Stogryn

Rev	Date	Amendments
1	18-May-2021	
2		
3		
4		
5		
6		
7		

Current Revision: 1

Page Number: Page 4

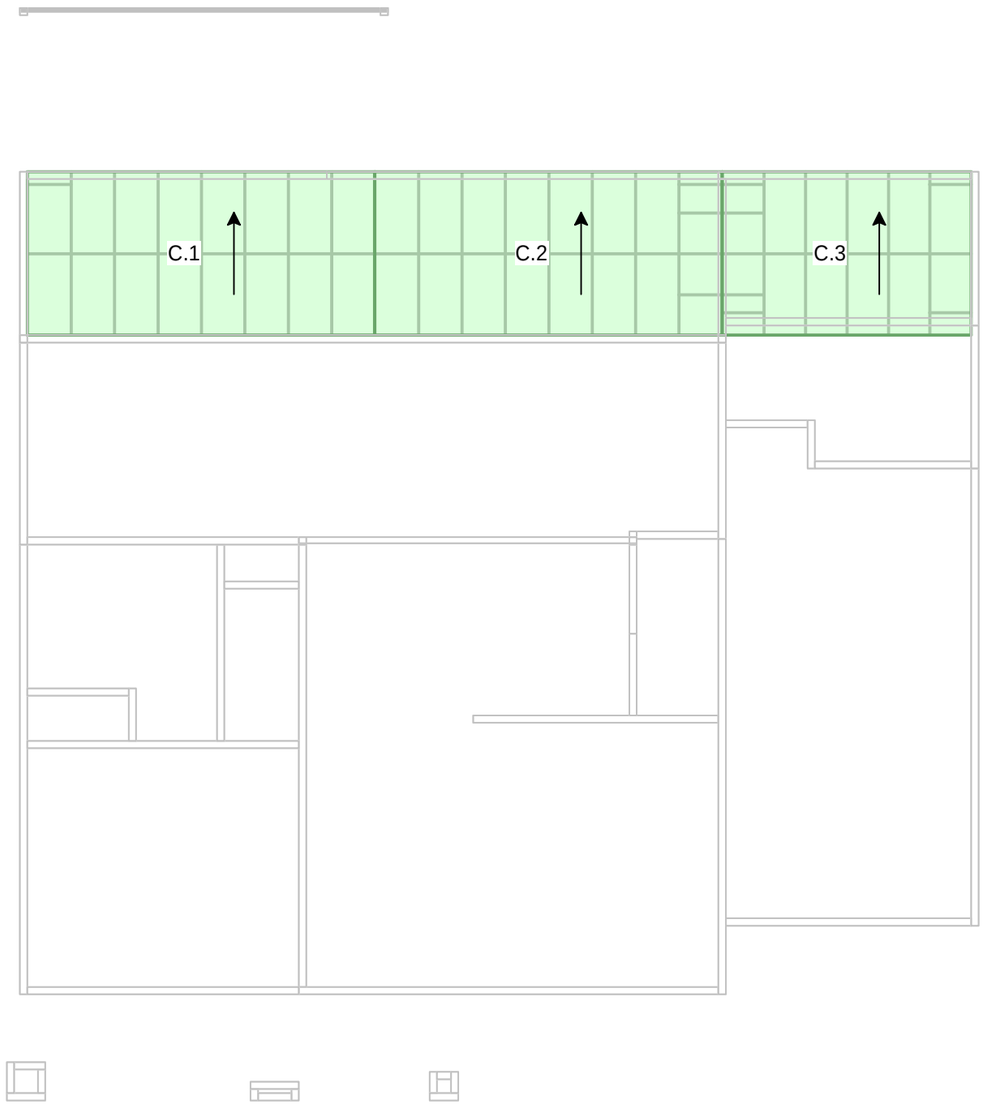

WWW.SPARKBUSINESSGROUP.COM.AU

SPARK BUSINESS GROUP PTY LTD
U3,13 McCormack Street
Ardell Park, NSW Tel: 0288 074717

****DO NOT SCALE****
CHECK ALL DIMENSIONS & LEVELS TO ARCHITECTURAL DRAWINGS BIFORE SET OUT OR ONSITE ERECTION.THESE LAYOUTS ARE TO BE READ IN CONJUNCTION WITH THE SCOTTSDALE CONSTRUCTION SYSTEMS MANUAL AND ANY OTHER CONSTRUCTION DETAILS PROVIDED.

Ceiling L1

Date	DRAWN
18/05/21	Michael Stogryn

Rev	Date	Amendments
1	18-May-2021	
2		
3		
4		
5		
6		
7		

Current Revision: 1

Page Number: Page 5

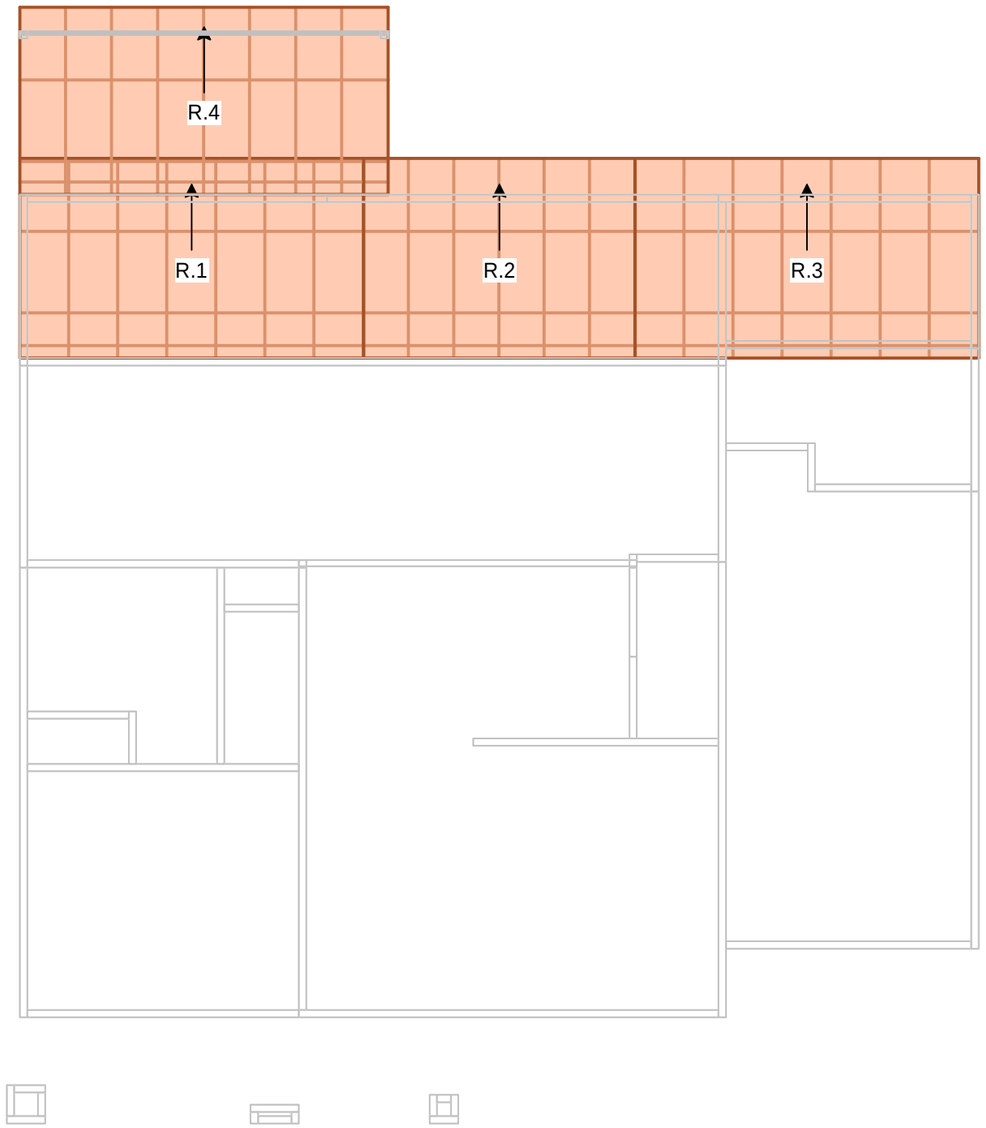

WWW.SPARKBUSINESSGROUP.COM.AU

SPARK BUSINESS GROUP PTY LTD
U3,13 McCormack Street
Ardell Park, NSW Tel: 0288 074717

****DO NOT SCALE****
CHECK ALL DIMENSIONS & LEVELS TO ARCHITECTURAL DRAWINGS BIFORE SET OUT OR ONSITE ERECTION.THESE LAYOUTS ARE TO BE READ IN CONJUNCTION WITH THE SCOTTSDALE CONSTRUCTION SYSTEMS MANUAL AND ANY OTHER CONSTRUCTION DETAILS PROVIDED.

Roof L1

Date	DRAWN
18/05/21	Michael Stogryn

Rev	Date	Amendments
1	18-May-2021	
2		
3		
4		
5		
6		
7		

Current Revision: 1

Page Number: Page 6

Walls (Level 1)						
Wall	Height	Gauge	Nog Spacing	Stud Spacing	Load Bearing	Double Verticals
LW1	2700	C90_37-0.95BMT-G550	1350	450	Yes	
LW2	2700	C90_37-0.95BMT-G550	1350	450	Yes	
LW5	2700	C90_37-0.55BMT-G550	1350	450		
LW6	2700	C90_37-0.55BMT-G550	1350	600		
LW7	2700	C90_37-0.55BMT-G550	1350	600		
LW8	2700	C90_37-0.55BMT-G550	1350	600		
LW9	2700	C90_37-0.55BMT-G550	1350	450	Yes	
LW11	3386	C90_37-0.95BMT-G550	1200	450	Yes	
LW12	3386	C90_37-0.95BMT-G550	1200	450		
LW15	2700	C90_37-0.55BMT-G550	1350	450		
LW16	2700	C90_37-0.55BMT-G550	1350	600		
LW17	300	C90_37-0.75BMT-G550	1350	450		
LW18	2700	C90_37-0.75BMT-G550	1350	450		
LW19	2700	C90_37-0.75BMT-G550	1350	450		
LW20	2700	C90_37-0.75BMT-G550	1350	450		
LW21	2700	C90_37-0.75BMT-G550	1350	450		
LW23	1200	C90_37-0.75BMT-G550	1350	450		
LW27	2700	C90_37-0.75BMT-G550	1350	450		
LW28	2700	C90_37-0.75BMT-G550	1350	450		
LW29	2700	C90_37-0.95BMT-G550	1350	450	Yes	
LW30	2700	C90_37-0.75BMT-G550	1350	600		
LW31	2700	C90_37-0.75BMT-G550	1350	450		
LW32	2700	C90_37-0.75BMT-G550	1200	450	Yes	
LW33	5610	C90_37-0.95BMT-G550	1200	300		Yes
LW34	5610	C90_37-0.95BMT-G550	1200	300		Yes
LW35	2700	C90_37-0.75BMT-G550	1200	450	Yes	
LW36	2700	C90_37-0.75BMT-G550	1400	450	Yes	
LW37	5610	C90_37-0.95BMT-G550	1200	300		Yes
LW38	5610	C90_37-0.95BMT-G550	1200	300		Yes
LW39	5610	C90_37-0.95BMT-G550	1200	300		Yes
LW40	2700	C90_37-0.75BMT-G550	1200	450	Yes	
LW41	2700	C90_37-0.75BMT-G550	1400	450	Yes	
LW42	5610	C90_37-0.95BMT-G550	1200	300		Yes
LW43	2700	C90_37-0.75BMT-G550	1400	450	Yes	
All Others	2700	C90_37-0.75BMT-G550	1350	450	Yes	

Roof Planes (Level 1)			
Name	Steel	Pitch	Rafter Spacing
R.1	C90_37-0.55BMT-G550	5	600
R.2	C90_37-0.55BMT-G550	5	600
R.3	C90_37-0.55BMT-G550	5	600
R.4	C90_37-0.55BMT-G550	5	600

Ceilings (Level 1)				
Name	Steel	Horz. Spacing	Vert. Spacing	Double Verticals
C.1	C90_37-0.55BMT-G550	Even: 1200	600	
C.2	C90_37-0.55BMT-G550	Even: 1200	600	
C.3	C90_37-0.55BMT-G550	Even: 1200	600	

ALL FLOOR TRUSSES ARE @450mm CENTRES UNLESS OTHERWISE SPECIFIED

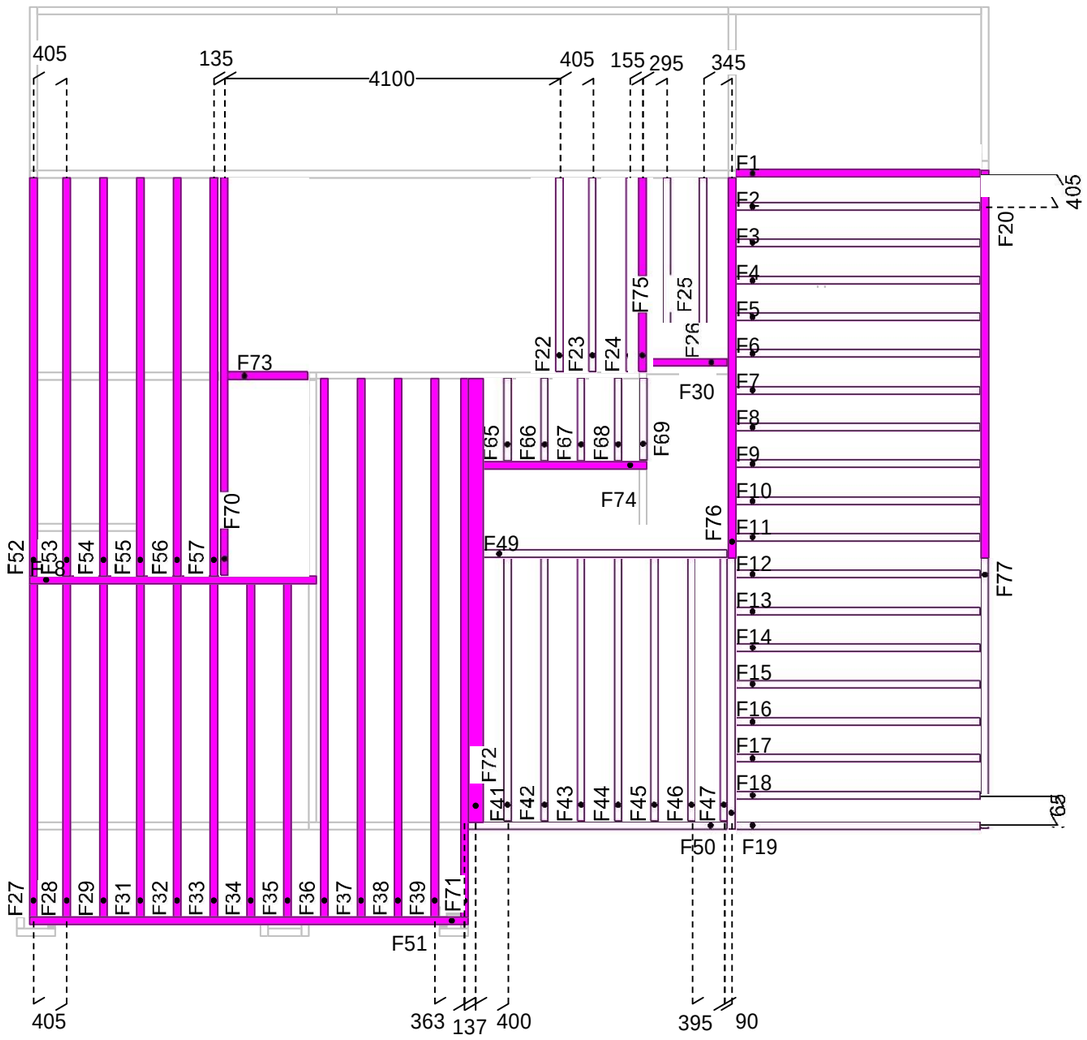

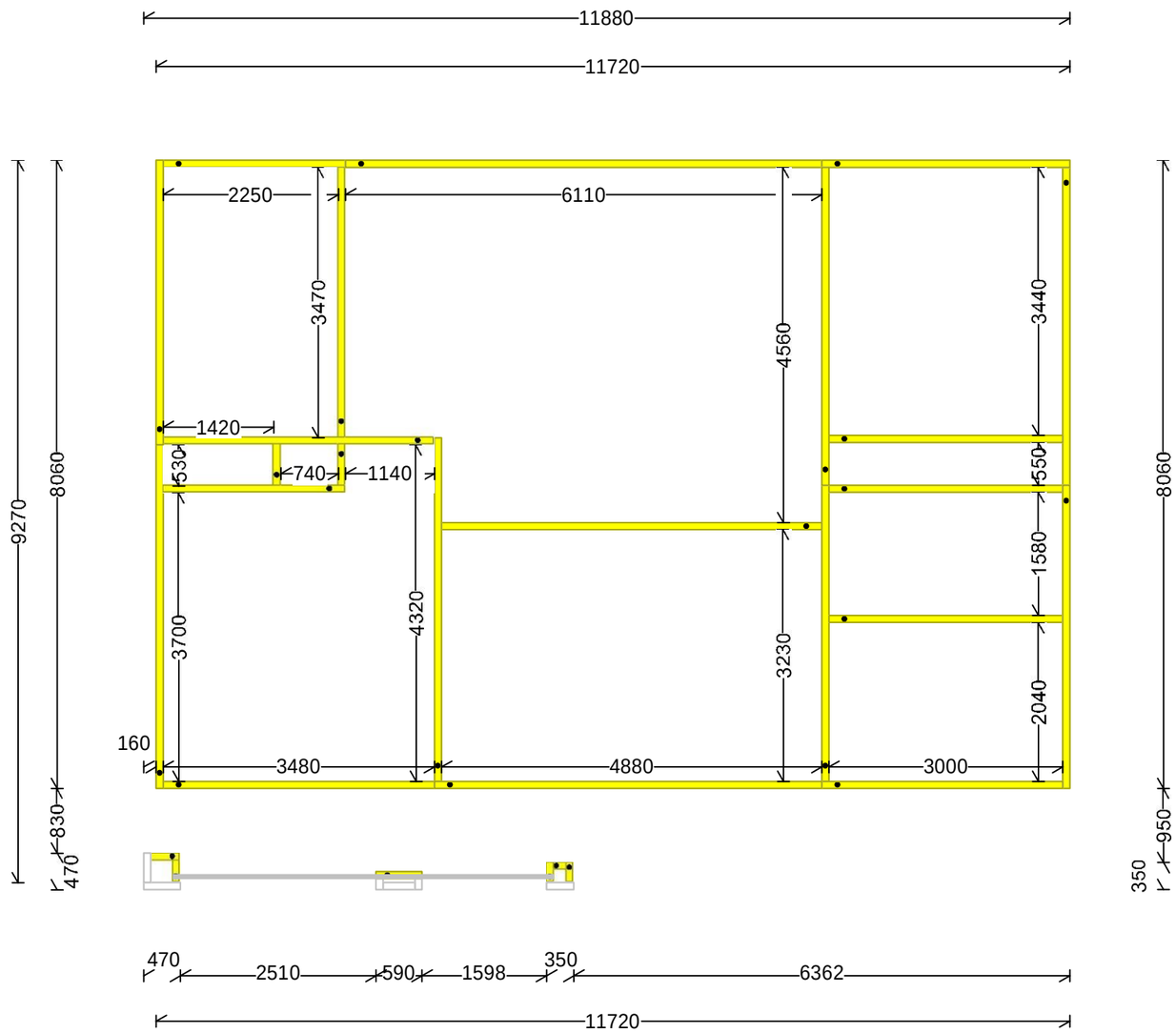

WWW.SPARKBUSINESSGROUP.COM.AU

SPARK BUSINESS GROUP PTY LTD
U3,13 McCormack Street
Ardell Park, NSW Tel: 0288 074717

****DO NOT SCALE****
CHECK ALL DIMENSIONS & LEVELS TO ARCHITECTURAL DRAWINGS BIFORE SET OUT OR ONSITE ERECTION.THESE LAYOUTS ARE TO BE READ IN CONJUNCTION WITH THE SCOTTSDALE CONSTRUCTION SYSTEMS MANUAL AND ANY OTHER CONSTRUCTION DETAILS PROVIDED.

Ext. Markout L2

Date	DRAWN
18/05/21	Michael Stogryn

Rev	Date	Amendments
1	18-May-2021	
2		
3		
4		
5		
6		
7		

Current Revision: 1

Page Number: Page 9

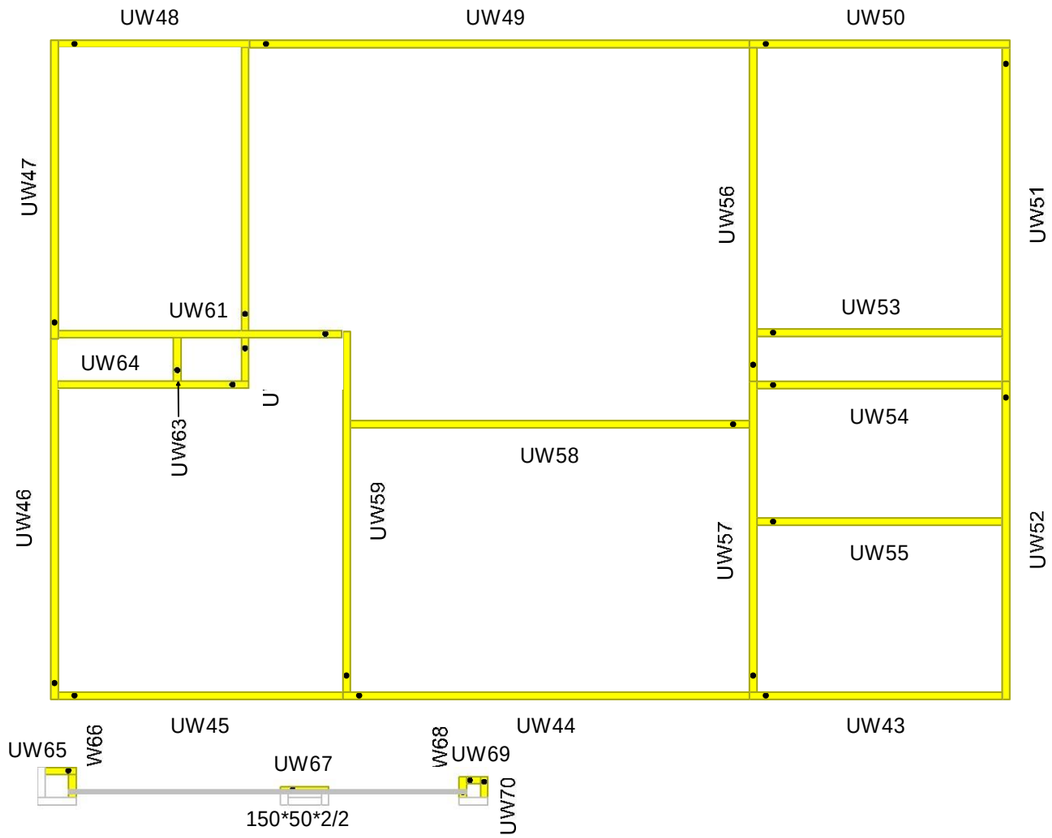

SPARK BUSINESS GROUP PTY LTD
U3,13 McCormack Street
Ardell Park, NSW Tel: 0288 074717

WWW.SPARKBUSINESSGROUP.COM.AU

****DO NOT SCALE****
CHECK ALL DIMENSIONS & LEVELS TO ARCHITECTURAL DRAWINGS BIFORE SET OUT OR ONSITE ERECTION. THESE LAYOUTS ARE TO BE READ IN CONJUNCTION WITH THE SCOTTSDALE CONSTRUCTION SYSTEMS MANUAL AND ANY OTHER CONSTRUCTION DETAILS PROVIDED.

Walls L2

Date	DRAWN
18/05/21	Michael Stogryn

Rev	Date	Amendments
1	18-May-2021	
2		
3		
4		
5		
6		
7		

Current Revision: 1

Page Number: Page 10

Windows (Level 2)				
Label	Width	Height	Top	Count
W1	1860	660	2430	1
W2	1260	1260	2430	4
W3	3270	2160	2430	1
W4	1860	1260	2430	2
W5	660	1860	2430	1

Doors (Level 2)			
Label	Width	Height	Count
D1	2390	2130	1
D2	920	2410	1
D3	880	2100	2
D4	680	2100	1
D5	1700	2150	1
D6	780	2100	1
D7	1420	2100	1
D8	990	2130	1
D9	875	2135	1

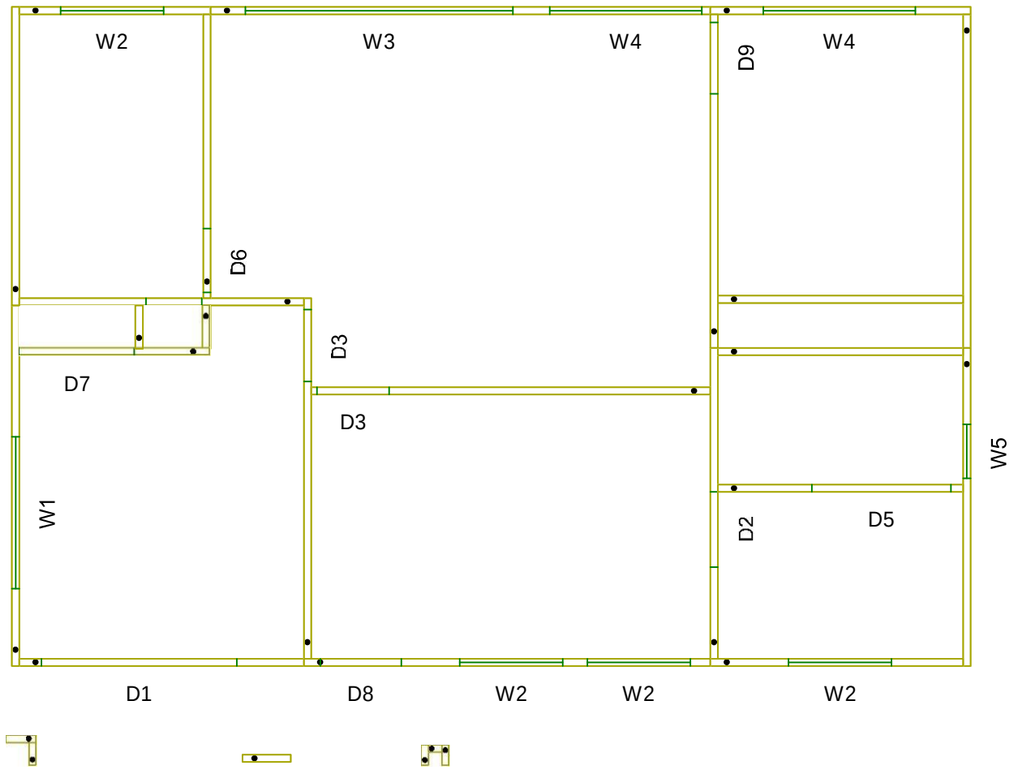

WWW.SPARKBUSINESSGROUP.COM.AU

SPARK BUSINESS GROUP PTY LTD
U3,13 McCormack Street
Ardell Park, NSW Tel: 0288 074717

****DO NOT SCALE****
CHECK ALL DIMENSIONS & LEVELS TO ARCHITECTURAL DRAWINGS BEFORE SET OUT OR ON SITE ERECTION. THESE LAYOUTS ARE TO BE READ IN CONJUNCTION WITH THE SCOTTSDALE CONSTRUCTION SYSTEMS MANUAL AND ANY OTHER CONSTRUCTION DETAILS PROVIDED.

Openings L2

Date	DRAWN
18/05/21	Michael Stogryn

Rev	Date	Amendments
1	18-May-2021	
2		
3		
4		
5		
6		
7		

Current Revision: 1

Page Number: Page 11

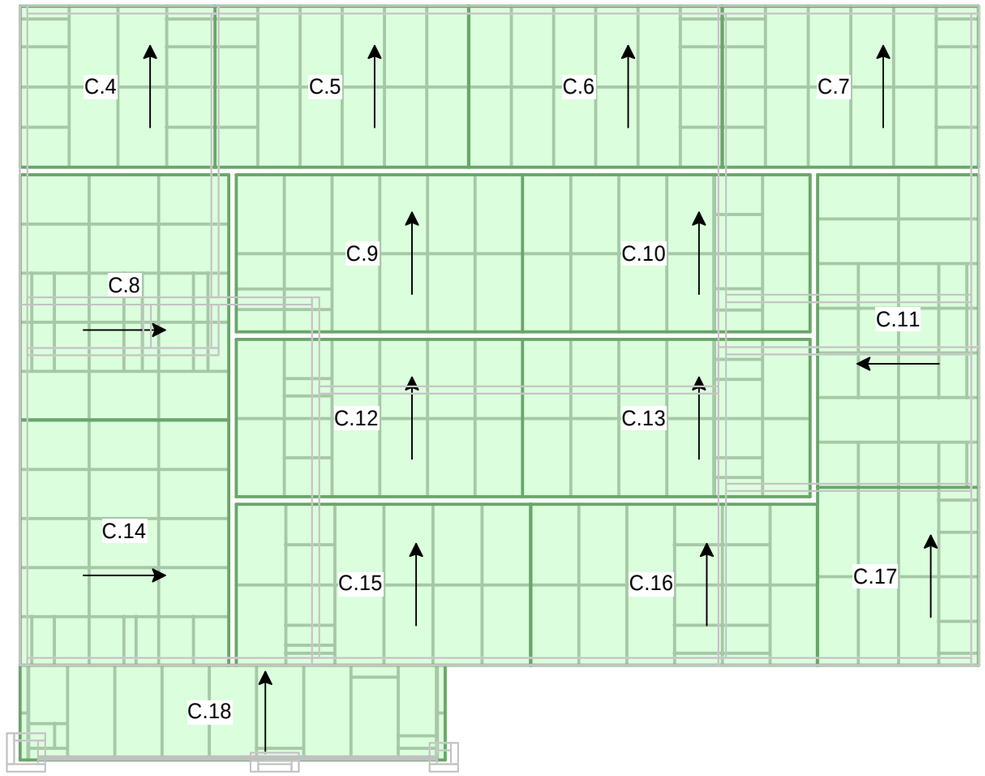

WWW.SPARKBUSINESSGROUP.COM.AU

SPARK BUSINESS GROUP PTY LTD
U3,13 McCormack Street
Ardell Park, NSW Tel: 0288 074717

****DO NOT SCALE****
CHECK ALL DIMENSIONS & LEVELS TO ARCHITECTURAL DRAWINGS BEFORE SET OUT OR ONSITE ERECTION.THESE LAYOUTS ARE TO BE READ IN CONJUNCTION WITH THE SCOTTSDALE CONSTRUCTION SYSTEMS MANUAL AND ANY OTHER CONSTRUCTION DETAILS PROVIDED.

Ceiling L2

Date	DRAWN
18/05/21	Michael Stogryn

Rev	Date	Amendments
1	18-May-2021	
2		
3		
4		
5		
6		
7		

Current Revision: 1

Page Number: Page 12

SPARK
Sparkhomes.com.au

WWW.SPARKBUSINESSGROUP.COM.AU

SPARK BUSINESS GROUP PTY LTD
U3,13 McCormack Street
Ardell Park, NSW Tel: 0288 074717

****DO NOT SCALE****
CHECK ALL DIMENSIONS & LEVELS TO ARCHITECTURAL DRAWINGS BEFORE SET OUT OR ONSITE ERECTION.THESE LAYOUTS ARE TO BE READ IN CONJUNCTION WITH THE SCOTTSDALE CONSTRUCTION SYSTEMS MANUAL AND ANY OTHER CONSTRUCTION DETAILS PROVIDED.

Supports L2

Date	DRAWN
18/05/21	Michael Stogryn

Rev	Date	Amendments
1	18-May-2021	
2		
3		
4		
5		
6		
7		

Current Revision: 1

Page Number: Page 13

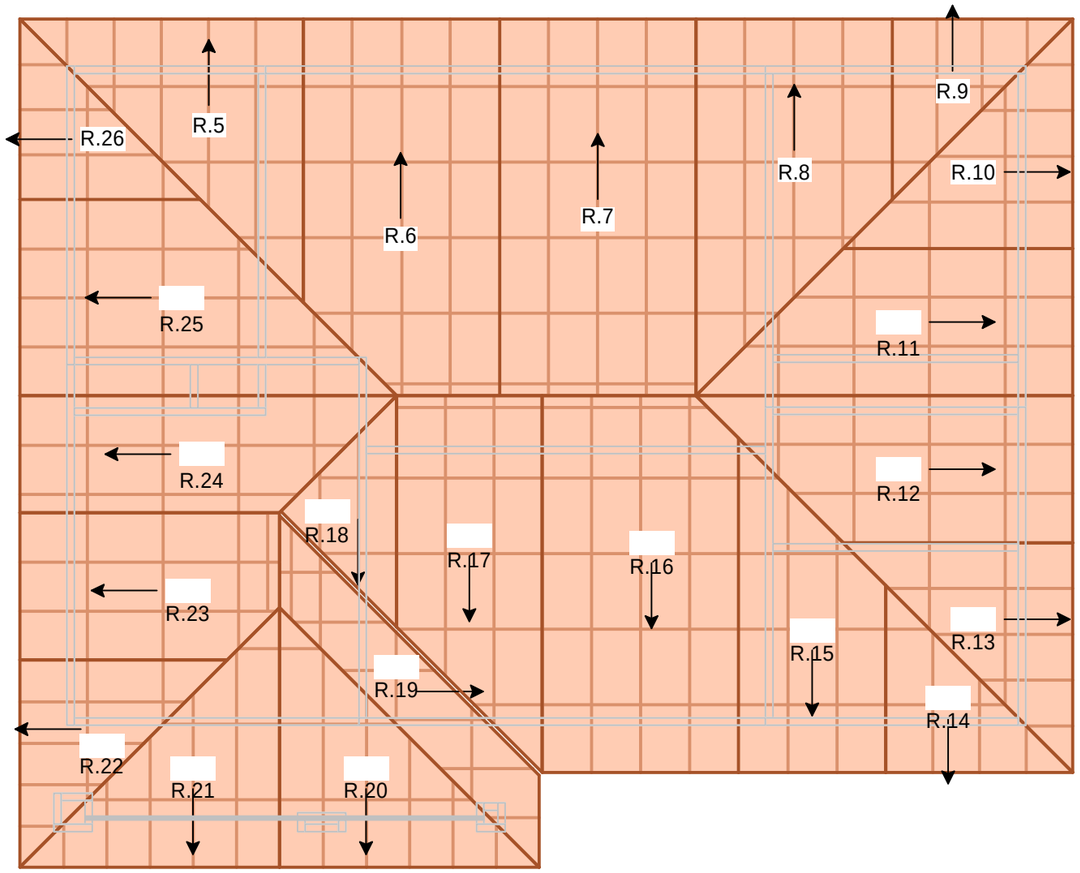

SPARK
Sparkhomes.com.au

WWW.SPARKB

USINESSGROUP

. C

Rev	Date	Amendments	Current Revision

O M

.AU

SPARK BUSINESS GROUP PTY LTD
U3,13 McCormack Street
Ardell Park, NSW Tel: 0288 074717

DO NOT SCALE
CHECK ALL DIMENSIONS & LEVELS TO ARCHITECTURAL DRAWINGS BIFORE SET OUT OR ONSITE ERECTION. THESE LAYOUTS ARE TO BE READ IN CONJUNCTION WITH THE SCOTTSDALE CONSTRUCTION SYSTEMS MANUAL AND ANY OTHER CONSTRUCTION DETAILS PROVIDED.

Date
18/05/21

Roof L2

DRAWN
Michael Stogryn

1
2
3
4
5
6
7

18-May-2021

Walls (Level 2)					
Wall	Height	Gauge	Nog Spacing	Stud Spacing	Load Bearing
UW49	2590	C90_37-0.75BMT-G550	1350	600	
UW53	490	C90_37-0.55BMT-G550	1350	600	
UW65	2590	C90_37-0.55BMT-G550	1400	450	
UW66	2590	C90_37-0.75BMT-G550	1400	450	
UW67	2440	C90_37-0.75BMT-G550	1200	450	
UW68	2590	C90_37-0.75BMT-G550	1400	450	
UW69	2590	C90_37-0.55BMT-G550	1400	450	
UW70	2590	C90_37-0.55BMT-G550	1400	450	
All Others	2590	C90_37-0.55BMT-G550	1350	600	

Supports (Level 2)					
Support	Height	Gauge	Spacing	Stud Spacing	Bearing
S10	2590	C90_37-0.55BMT-G550	1200	Even: 600	
S11	2590	C90_37-0.55BMT-G550	1200	Even: 600	
All Others	2590	C90_37-0.75BMT-G550	1200	Even: 600	

Roof Planes (Level 2)			
Name	Steel	Pitch	Rafter Spacing
R.19	C90_37-0.75BMT-G550	22	Fixed @600
R.24	C90_37-0.75BMT-G550	22	Fixed @600
All Others	C90_37-0.75BMT-G550	22	Even: 600

Ceilings (Level 2)				
Name	Steel	Horz. Spacing	Vert. Spacing	Double Verticals
C.8	C90_37-0.75BMT-G550	Even: 1200	Even: 600	
C.14	C90_37-0.75BMT-G550	Even: 1200	Even: 600	
All Others	C90_37-0.55BMT-G550	Even: 1200	Even: 600	

Floor Trusses (Level 2)			
Name	Steel	Span	Ply
F20	C90_37-0.75BMT-G550	4.7	1
F21	C90_37-0.75BMT-G550	3.3	1
F22	C90_37-0.95BMT-G550	2.4	1
F23	C90_37-0.95BMT-G550	2.4	1
F24	C90_37-0.95BMT-G550	2.4	1
F25	C90_37-0.95BMT-G550	2.2	1
F26	C90_37-0.95BMT-G550	2.2	1
F27	C90_37-0.75BMT-G550	4.1	1
F28	C90_37-0.95BMT-G550	4.1	1
F29	C90_37-0.95BMT-G550	4.1	1
F30	C90_37-0.95BMT-G550	1	1
F31	C90_37-0.95BMT-G550	4.1	1
F32	C90_37-0.95BMT-G550	4.1	1
F33	C90_37-0.95BMT-G550	4.1	1
F34	C90_37-0.95BMT-G550	4.1	1
F35	C90_37-0.95BMT-G550	4.1	1
F36	C90_37-0.95BMT-G550	6.6	1

Floor Trusses (Level 2)			
Name	Steel	Span	Ply
F37	C90_37-0.95BMT-G550	6.6	1
F38	C90_37-0.95BMT-G550	6.6	1
F39	C90_37-0.95BMT-G550	6.6	1
F41	C90_37-0.95BMT-G550	3.2	1
F42	C90_37-0.95BMT-G550	3.2	1
F43	C90_37-0.95BMT-G550	3.2	1
F44	C90_37-0.95BMT-G550	3.2	1
F45	C90_37-0.95BMT-G550	3.2	1
F46	C90_37-0.95BMT-G550	3.2	1
F47	C90_37-0.95BMT-G550	3.2	1
F48	C90_37-0.75BMT-G550	3.5	1
F49	C90_37-0.75BMT-G550	3	1
F50	C90_37-0.75BMT-G550	3.2	1
F51	C90_37-0.95BMT-G550	5.4	1
F52	C90_37-0.75BMT-G550	4.9	1
F53	C90_37-0.75BMT-G550	4.9	1
F54	C90_37-0.75BMT-G550	4.9	1
F55	C90_37-0.75BMT-G550	4.9	1
F56	C90_37-0.75BMT-G550	4.9	1
F57	C90_37-0.75BMT-G550	4.9	1
F58	C90_37-0.95BMT-G550	2.4	1
F59	C90_37-0.95BMT-G550	2.4	1
F65	C90_37-0.75BMT-G550	1	1
F66	C90_37-0.75BMT-G550	1	1
F67	C90_37-0.75BMT-G550	1	1
F68	C90_37-0.75BMT-G550	1	1
F69	C90_37-0.75BMT-G550	1	1
F70	C90_37-0.75BMT-G550	4.9	1
F71	C90_37-0.95BMT-G550	6.6	1
F72	C90_37-0.75BMT-G550	5.4	3
F73	C90_37-0.75BMT-G550	1	1
F74	C90_37-0.95BMT-G550	2	1
F75	C90_37-0.95BMT-G550	2.4	1
F76	C90_37-0.75BMT-G550	4.6	1
F77	C90_37-0.95BMT-G550	3.3	1
All Others	C90_37-0.95BMT-G550	3	1

MANUAL AND ANY OTHER CONSTRUCTION DETAILS PROVIDED.

Date	DRAWN	5
18/05/21	Michael Stogryn	

Bracing X-Direction

Bracing Required = 43kN

Label	Length	No. Of	Value	Frame Gauge	Stud Height (mm)	Connections	Total
1	1.8 X-Brace	2	2.66	0.55mm	2700	3 teks	5.32
2	2.4 X-Brace	2	2.85	0.55mm	2700	3 teks	5.7
3	K-Brace	3	1.47	0.55mm	2700	R + T	4.41
4	1.2 X-Brace	2	2.47	0.75mm	2700	3 Teks	4.94
5	1.8 X-Brace	2	2.85	0.75mm	2700	3 Teks	5.7
6	3.0 X-Brace	4	4.52	0.75mm	2700	3 Teks	18.08
7	K-Brace	2	2.07	0.95mm	2700	R + T	4.14
					Bracing Achieved Total :		48.29

Bracing Y-Direction

Bracing Required = 52kN

				Frame Gauge			
A	1.8 X-Brace	2	2.66	0.55mm	2700	3 Teks	5.32
B	K-Brace	1	1.47	0.55mm	2700	R + T	1.47
C	1.2 X-Brace	2	2.47	0.75mm	2700	3 Teks	4.94
D	2.4 X-Brace	6	4.04	0.75mm	2700	3 Teks	24.24
E	3.0 X-Brace	6	4.52	0.75mm	2700	3 Teks	27.12
F	K-Brace	6	1.66	0.75mm	2700	R + T	9.96
G	2.4 X-Brace	2	3.52	0.95mm	3386	3 Teks	0
H	3.0 X-Brace	2	4.03	0.95mm		3 Teks	8.06

Bracing Achieved Total : 81.11

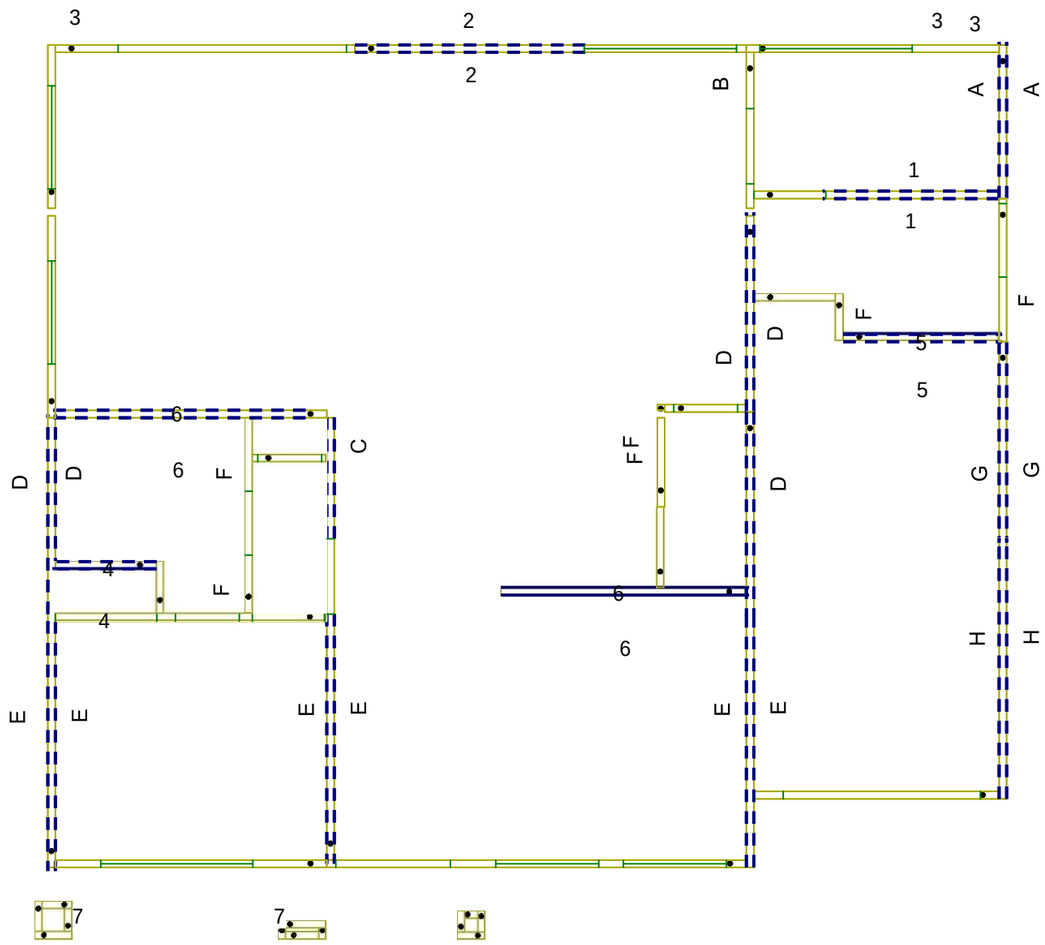

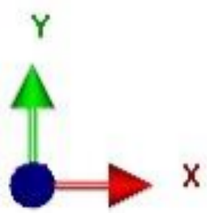

SPARK
Sparkhomes.com.au

Rev	Date	Amendments	Current Revision

WWW.SPARKBUSINESSGROUP.COM.AU

SPARK BUSINESS GROUP PTY LTD
U3,13 McCormack Street
Ardell Park, NSW Tel: 0288 074717

*****DO NOT SCALE******
CHECK ALL DIMENSIONS & LEVELS TO ARCHITECTURAL DRAWINGS BEFORE SET OUT OR ONSITE ERECTION.THESE LAYOUTS ARE TO BE READ IN CONJUNCTION WITH THE SCOTTSDALE CONSTRUCTION SYSTEMS MANUAL AND ANY OTHER CONSTRUCTION DETAILS PROVIDED.

Bracing L1

Date	DRAWN
18/05/21	Michael Stogryn

1
2
3
4
5
6
7

18-May-2021

1

Page Number

Page 16

Bracing X-Direction							
Bracing Required = 18kN							
Label	Length	No. Of	Value	Frame Gauge	Stud Height	Connections	Total
1	1.2 X-Brace	1	2.02	0.55mm	2590	3 Teks	2.02
2	3.0 X-Brace	2	3.63	0.55mm	2590	3 Teks	7.26
3	K-Brace	8	1.52	0.55mm	2590	R + T	12.16
		Bracing Achieved Total :					21.44

Bracing Y-Direction							
			Bracing Required = 27kN				
				Frame Gauge	Stud Height		
A	1.2 X-Brace	1	2.02	0.55mm	2590	3 Teks	2.02
B	1.8 X-Brace	1	2.74	0.55mm	2590	3 Teks	2.74
C	2.4 X-Brace	1	3.26	0.55mm	2590	3 Teks	3.26
D	3.0 X-Brace	4	3.63	0.55mm	2590	3 Teks	14.52
E	K-Brace	6	1.52	0.55mm	2590	R + T	9.12
		Bracing Achieved Total :					31.66

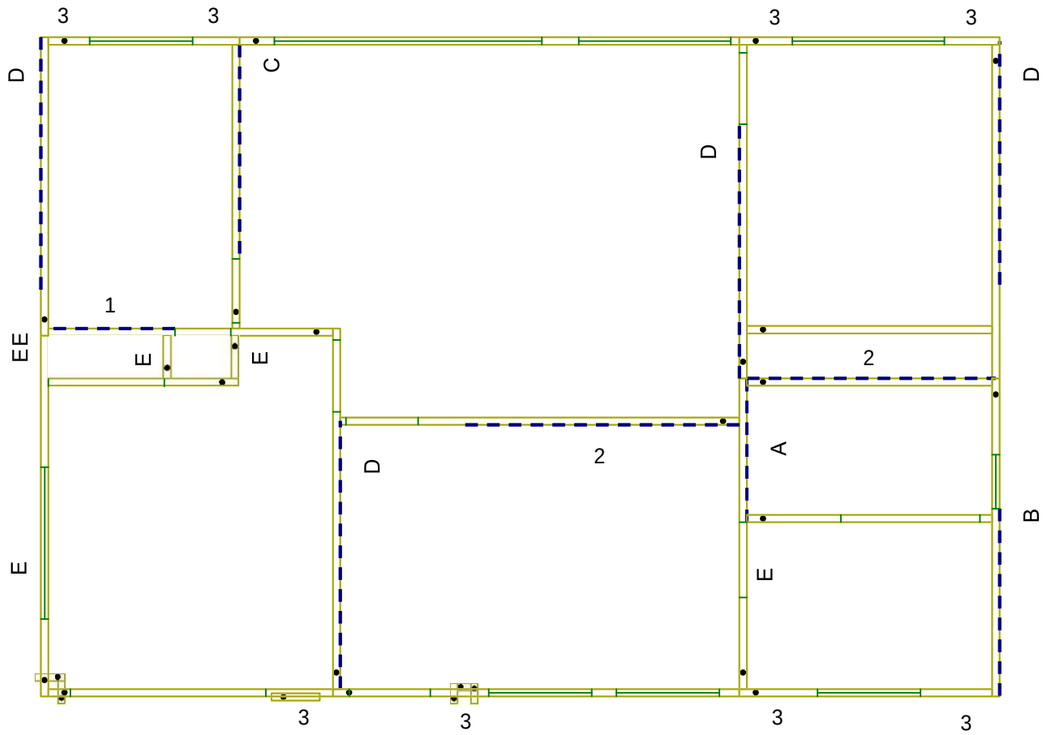

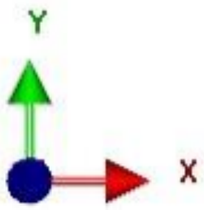

SPARK
Sparkhomes.com.au

WWW.SPARKBUSINESSGROUP.COM.AU

SPARK BUSINESS GROUP PTY LTD
U3,13 McCormack Street
Ardell Park, NSW Tel: 0288 074717

****DO NOT SCALE****
CHECK ALL DIMENSIONS & LEVELS TO ARCHITECTURAL DRAWINGS
BEFORE SET OUT OR ONSITE ERECTION.THESE LAYOUTS ARE TO BE READ
IN CONJUNCTION WITH THE SCOTTSDALE CONSTRUCTION SYSTEMS
MANUAL AND ANY OTHER CONSTRUCTION DETAILS PROVIDED.

Bracing L2

Date	DRAWN
18/05/21	Michael Stogryn

Rev	Date	Amendments
1	18-May-2021	
2		
3		
4		
5		
6		
7		

Current Revision
1

Page Number
Page 17

DETAIL FIXING REQUIREMENTS BOTTOM PLATE TO SLAB - EXTERNAL BRACING WALL

WIND	ROOF	MINIMUM CONNECTION REQUIREMENTS
N3	SHEET	M12x75 Concrete Screw Bolts with 6xTek Screws into 150x90x75x3.0 L-Bracket @ 1800 cts
C2	SHEET	M12x90 Concrete Screw Bolts with 6xTek Screws into 150x90x75x3.0 L-Bracket @ 1200 cts

NOTE: ADDITIONAL FIXINGS WITHIN 300mm OF CORNERS, EITHER SIDE OF OPENINGS & BRACING WALL ENDS

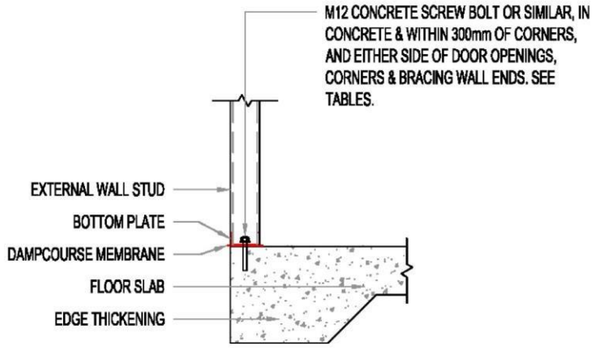

DETAIL

EXTERNAL LOAD BEARING/BRACING WALL ON SLAB

DETAIL FIXING REQUIREMENTS BOTTOM PLATE TO SLAB - INTERNAL BRACING WALL

WIND	ROOF	MINIMUM CONNECTION REQUIREMENTS
N3	SHEET	M12x75 Concrete Screw Bolts with 6xTek Screws into 150x90x75x3.0 L-Bracket @ 1800 cts
C2	SHEET	M12x75 Concrete Screw Bolts with 6xTek Screws into 150x90x75x3.0 L-Bracket @ 900 cts

NOTE: ADDITIONAL FIXINGS WITHIN 300mm OF CORNERS, EITHER SIDE OF OPENINGS & BRACING WALL ENDS

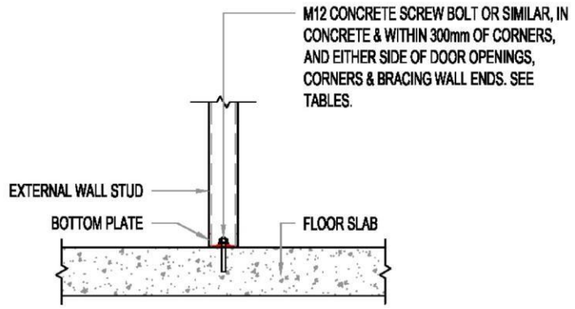

DETAIL

INTERNAL LOAD BEARING/BRACING WALL ON SLAB

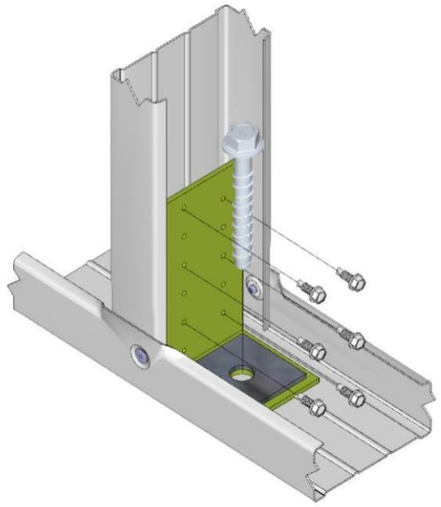

DETAIL FIXING REQUIREMENTS BOTTOM PLATE TO SLAB - INTERNAL NON-LOAD BEARING WALL

WIND	ROOF	MINIMUM CONNECTION REQUIREMENTS
N3	SHEET	2 x 25mm Concrete Nails & Washers @ 1200 cts
C2	SHEET	2 x 25mm Concrete Nails & Washers @ 600 cts

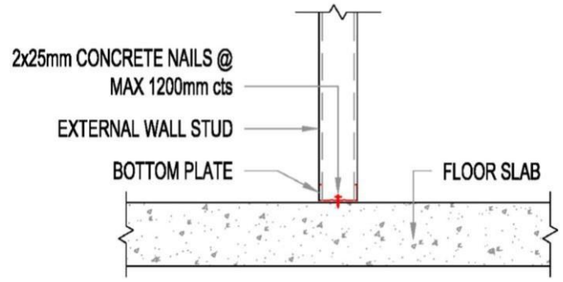

DETAIL

INTERNAL NON LOADBEARING WALL ON SLAB

DETAIL FIXING REQUIREMENTS BOTTOM PLATE TO SLAB - EXTERNAL LOAD BEARING WALL

WIND	ROOF	MINIMUM CONNECTION REQUIREMENTS
N3	SHEET	M12x75 Concrete Screw Bolts with 50x50x3.0 Washer @ 1800 cts
C2	SHEET	M12x90 Concrete Screw Bolts with 50x50x3.0 Washer @ 1200 cts

NOTE: ADDITIONAL FIXINGS WITHIN 300mm OF CORNERS, EITHER SIDE OF OPENINGS & BRACING WALL ENDS

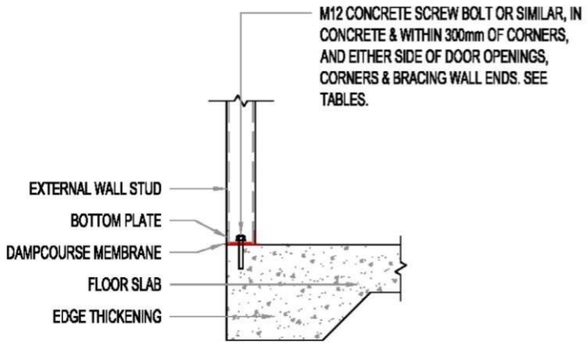

DETAIL

EXTERNAL LOAD BEARING/BRACING WALL ON SLAB

DETAIL FIXING REQUIREMENTS BOTTOM PLATE TO SLAB - INTERNAL LOAD BEARING WALL

WIND	ROOF	MINIMUM CONNECTION REQUIREMENTS
N3	SHEET	M12x75 Concrete Screw Bolts with 50x50x3.0 Washer @ 1800 cts
C2	SHEET	M12x75 Concrete Screw Bolts with 50x50x3.0 Washer @ 900 cts

NOTE: ADDITIONAL FIXINGS WITHIN 300mm OF CORNERS, EITHER SIDE OF OPENINGS & BRACING WALL ENDS

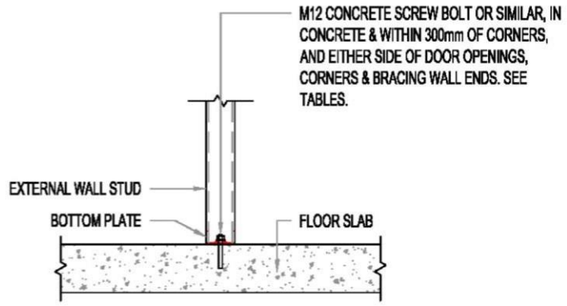

DETAIL

INTERNAL LOAD BEARING/BRACING WALL ON SLAB

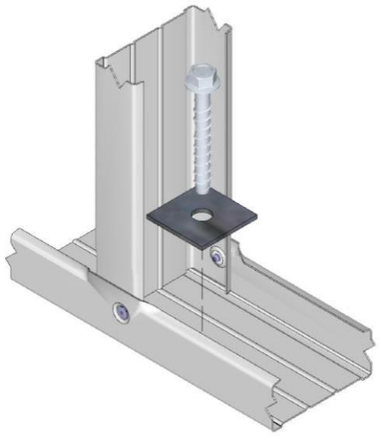

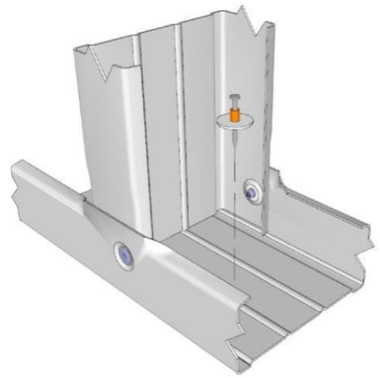

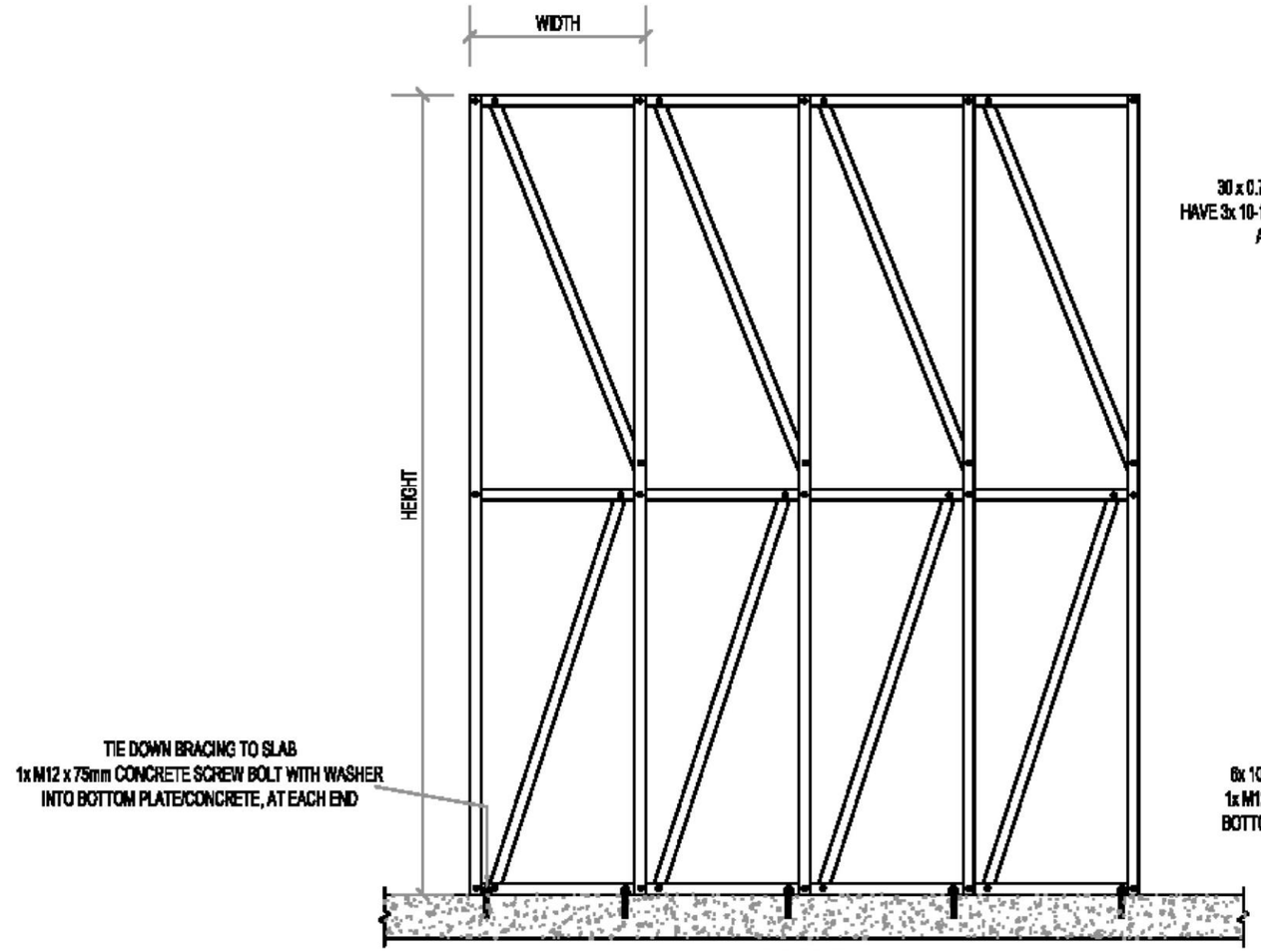

DETAIL
K-BRACE TO SLAB

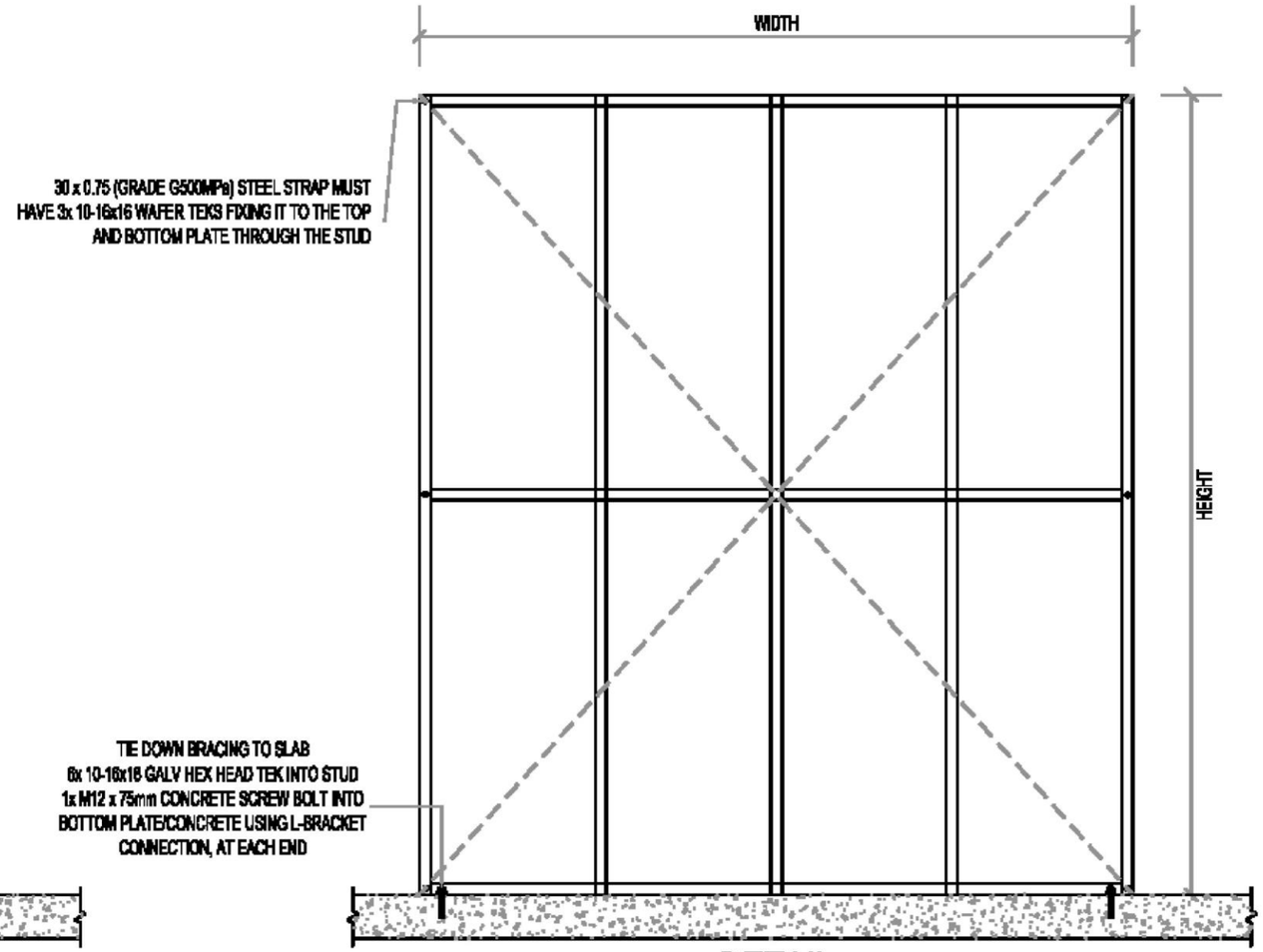

DETAIL
CROSS STRAP BRACING TO SLAB

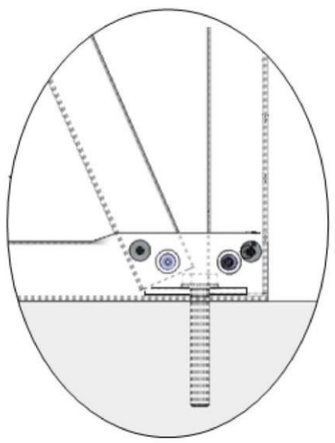

K-BRACING SCREW CONNECTION
AT ALL JOINT MEMBERS
BOLT & WASHER HOLD DOWN

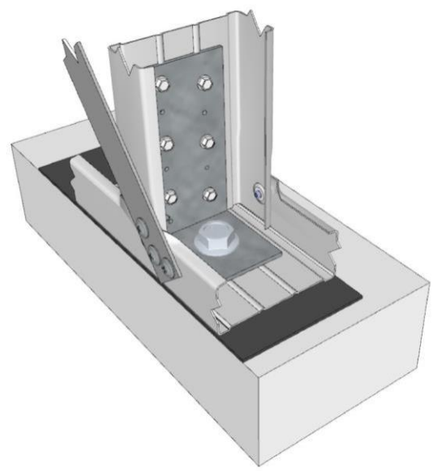

STRAP BRACING CONNECTION
AT EACH BOTTOM CHORD END

DETAIL FIXING REQUIREMENTS - BRACING WALL (PARALLEL TO JOISTS)

WIND	ROOF	MINIMUM CONNECTION REQUIREMENTS
N3	SHEET	1x L-Bracket @ 900 cts Max within 300mm of Corners & Each Side of Openings, with 6x Tek Screws into Stud & 4 x Tek Screw into Bottom Plate
C2	SHEET	1x L-Bracket @ 450 cts Max within 300mm of Corners and Each Side of Openings, with 6x Tek Screws into Stud & 4 x Tek Screw into Bottom Plate

SERIES 500 12-24x32 GALVANISED TO FLOOR JOIST

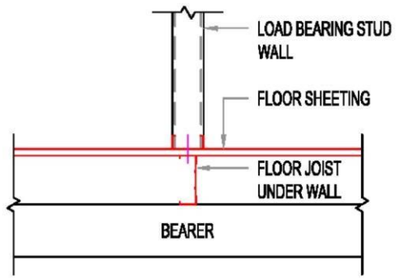

LOAD BEARING & BRACING WALL ON FLOOR - PARALLEL TO JOISTS

DETAIL FIXING REQUIREMENTS - BRACING WALL (PERPENDICULAR TO JOISTS)

WIND	ROOF	MINIMUM CONNECTION REQUIREMENTS
N3	SHEET	1x L-Bracket @ 900 cts Max within 300mm of Corners & Each Side of Openings, with 6x Tek Screws into Stud & 4 x Tek Screw into Bottom Plate
C2	SHEET	1x L-Bracket @ 450 cts Max within 300mm of Corners and Each Side of Openings, with 6x Tek Screws into Stud & 4 x Tek Screw into Bottom Plate

SERIES 500 12-24x32 GALVANISED TO FLOOR JOIST

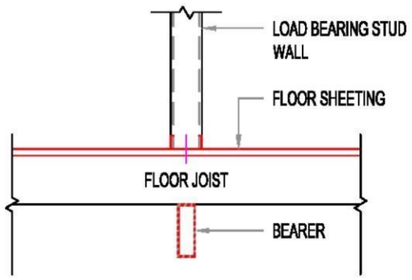

LOAD BEARING & BRACING WALL ON FLOOR - PERP. TO JOISTS

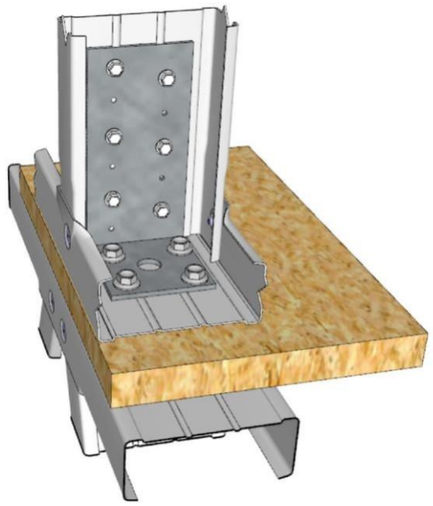

DETAIL FIXING REQUIREMENTS - NON LOAD BEARING WALL (PARALLEL TO JOISTS)

WIND	ROOF	MINIMUM CONNECTION REQUIREMENTS
N3	SHEET	1 x Tek Screw @ 900 cts Max within 300mm of Corners and Each Side of Openings
C2	SHEET	1 x Tek Screw @ 450 cts Max within 300mm of Corners and Each Side of Openings

REFER TO TABLE 'DETAIL FIXING REQUIREMENTS - N.L.B.W. PARALLEL' FOR NUMBER OF FIXINGS

SERIES 500 12-24x32 GALVANISED TO FLOOR JOIST & NOGGING

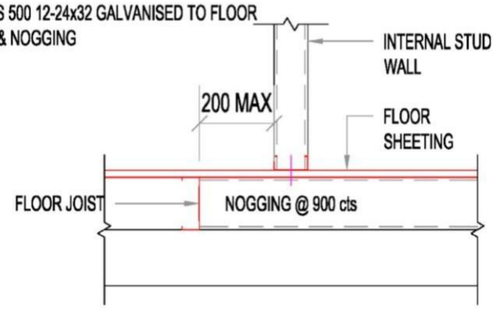

NON LOAD BEARING WALL ON FLOOR - WALL PARALLEL TO JOISTS

DETAIL FIXING REQUIREMENTS - LOAD BEARING WALL (PARALLEL TO JOISTS)

WIND	ROOF	MINIMUM CONNECTION REQUIREMENTS
N3	SHEET	3 x Tek Screw @ 900 cts Max within 300mm of Corners and Each Side of Openings
C2	SHEET	3 x Tek Screw @ 450 cts Max within 300mm of Corners and Each Side of Openings

SERIES 500 12-24x32 GALVANISED TO FLOOR JOIST

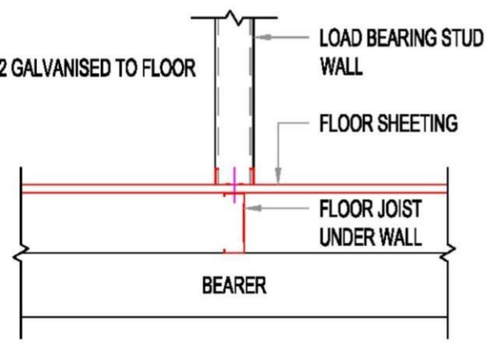

DETAIL

LOAD BEARING & BRACING WALL ON FLOOR - PARALLEL TO JOISTS

DETAIL FIXING REQUIREMENTS - LOAD BEARING WALL (PERPENDICULAR TO JOISTS)

WIND	ROOF	MINIMUM CONNECTION REQUIREMENTS
N3	SHEET	3 x Tek Screw @ 900 cts Max within 300mm of Corners and Each Side of Openings
C2	SHEET	3 x Tek Screw @ 450 cts Max within 300mm of Corners and Each Side of Openings

SERIES 500 12-24x32 GALVANISED TO FLOOR JOIST

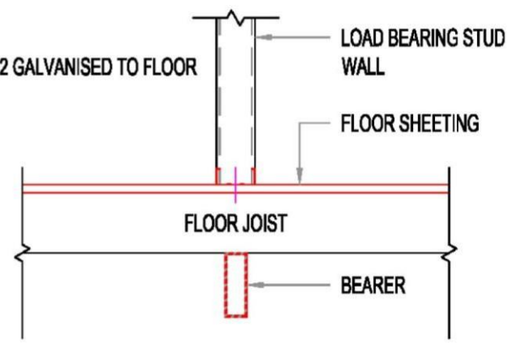

LOAD BEARING & BRACING WALL ON FLOOR - PERP. TO JOISTS

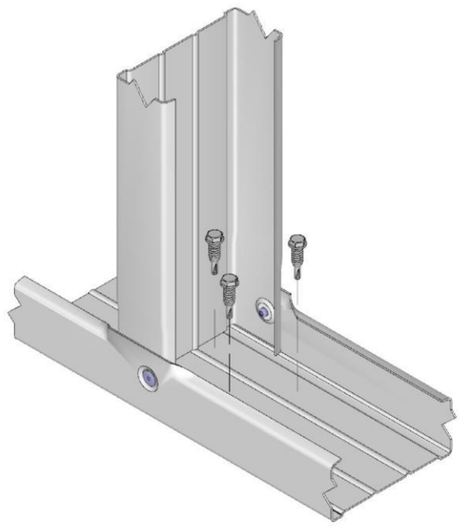

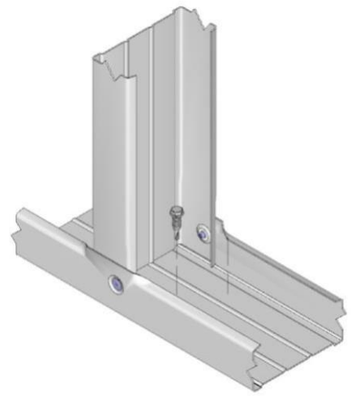

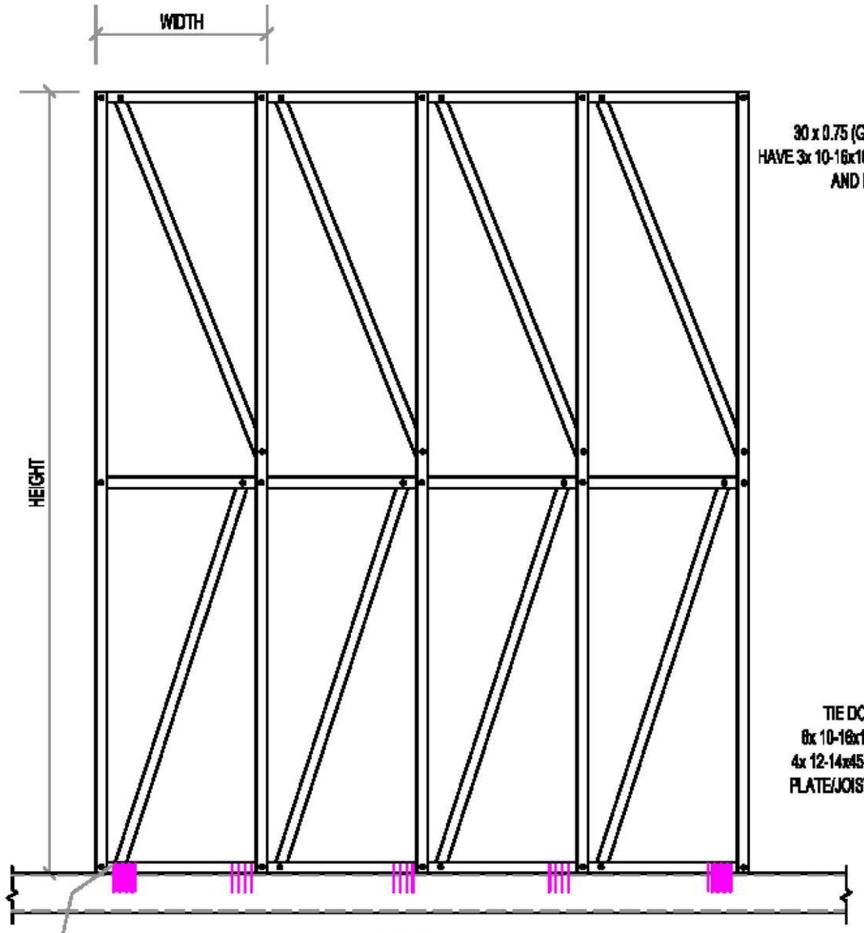

TIE DOWN BRACING TO FLOOR/JOIST
8x 12-14x45 GALV HEX HEAD TEK INTO BOTTOM @ END STUDS
4x 12-14x45 GALV HEX HEAD TEK INTO BOTTOM @ MIDDLE STUDS
PLATE/JOISTS AT END OF EACH BRACE

DETAIL
K-BRACE TO SUB-FLOOR/JOIST

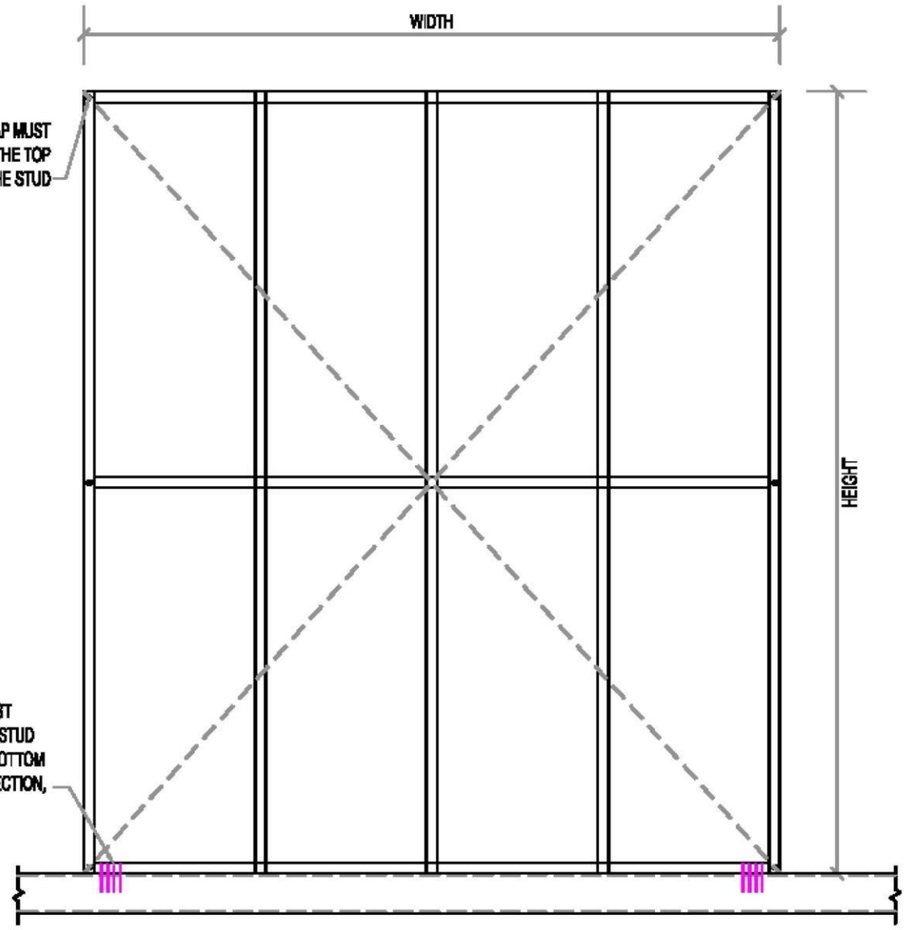

30 x 0.75 (GRADE G500MPa) STEEL STRAP MUST
HAVE 3x 10-16x16 WAFER TEKS FIXING IT TO THE TOP
AND BOTTOM PLATE THROUGH THE STUD

TIE DOWN BRACING TO FLOOR/JOIST
6x 10-16x16 GALV HEX HEAD TEK INTO STUD
4x 12-14x45 GALV HEX HEAD TEK INTO BOTTOM
PLATE/JOISTS USING L-BRACKET CONNECTION,
AT EACH END

DETAIL
CROSS STRAP BRACING TO SUB-FLOOR/JOIST

K-BRACING SCREW CONNECTION
AT ALL JOINT MEMBERS

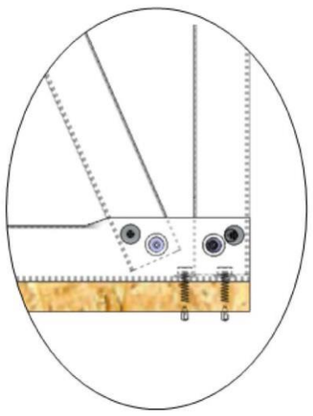

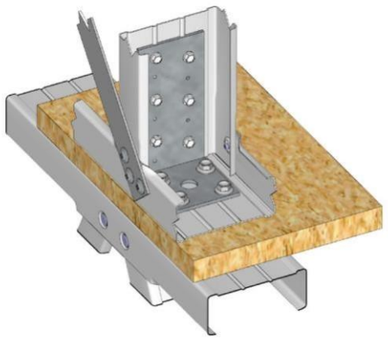

TRAP BRACING CONNECTION
T EACH BOTTOM CHORD END

DETAIL SHOWS A SINGLE SIDED STRAP BRACE TIE DOWN
WHEN A DOUBLE STRAP (1 EACH SIDE) THE AMOUNT OF TIE DOWN
CONNECTIONS ARE DOUBLED

Technical Information

Hold Downs for Scottsdale Light Gauge System

CYCLONE STRAP

The Cyclone Strap is typically used to provide high capacity hold down for both the SCOTRUSS® Roof Truss and SCOTPANEL© system.

Name	Cyclone Strap

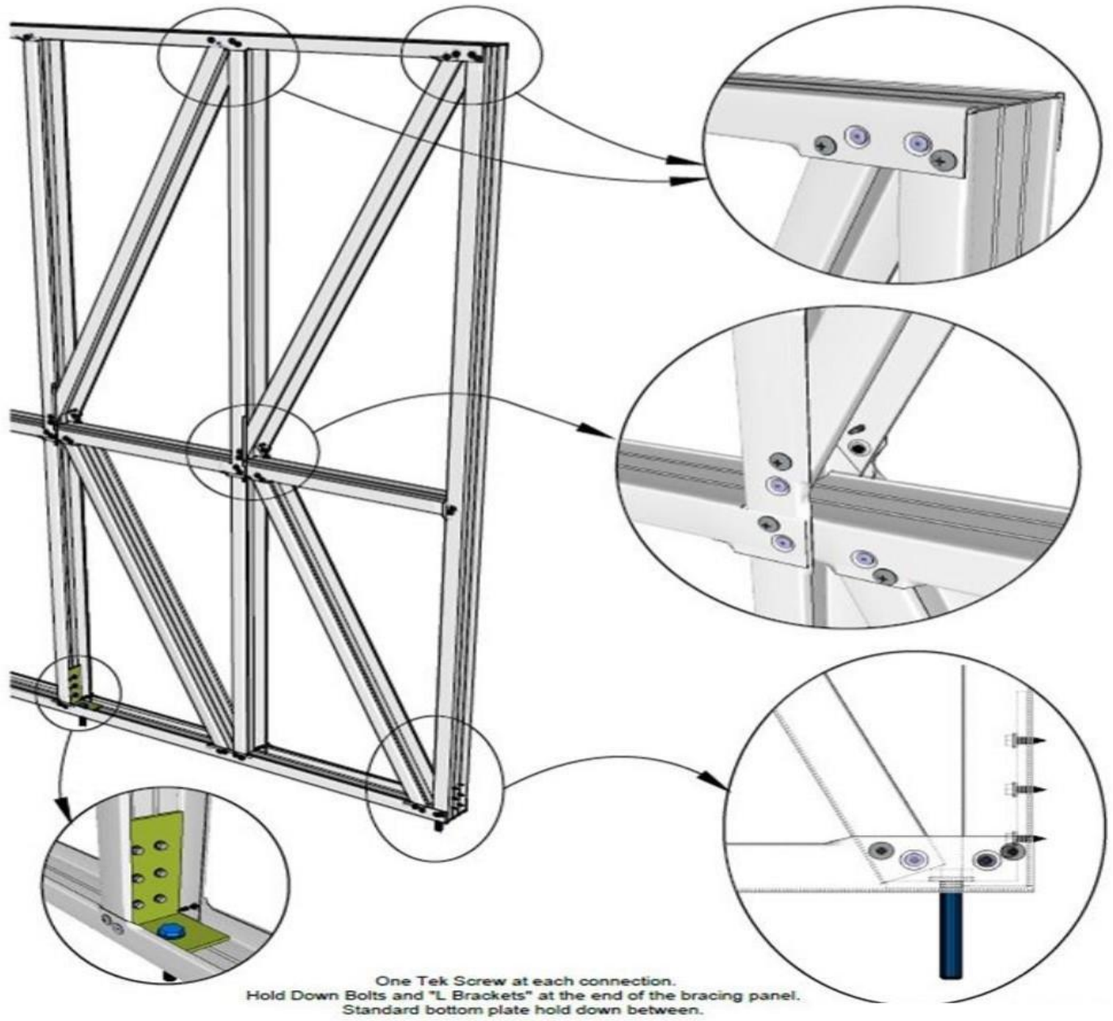

One Tek Screw at each connection.
Hold Down Bolts and "L Brackets" at the end of the bracing panel.
Standard bottom plate hold down between.

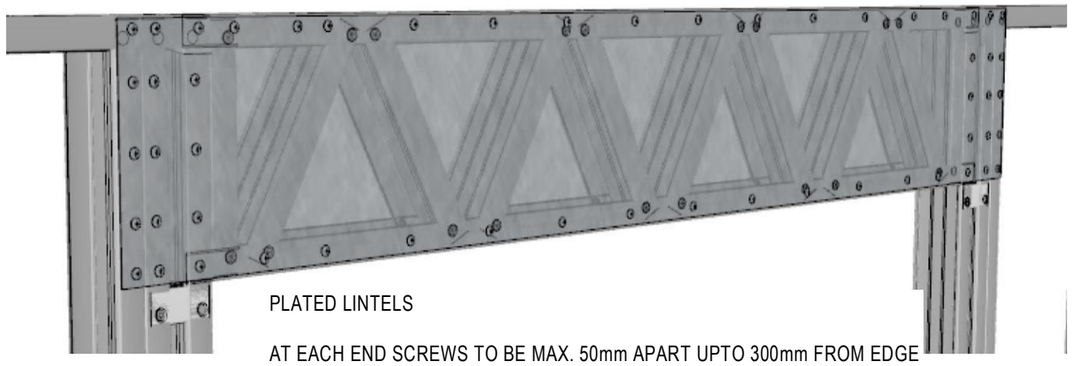

PLATED LINTELS

AT EACH END SCREWS TO BE MAX. 50mm APART UPTO 300mm FROM EDGE
THEN 150mm CENTRES FOR CENTRE AREA

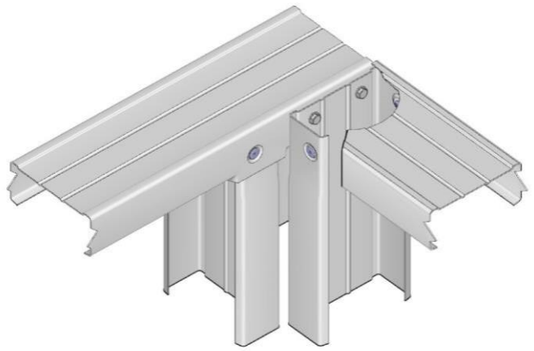

GENERAL WALL FRAMING CONNECTION
2x HEX HEAD TEK SCREWS TOP, BOTTOM & HORIZONTAL MEMBER

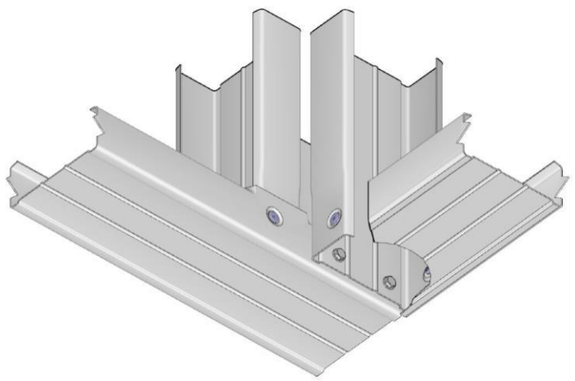

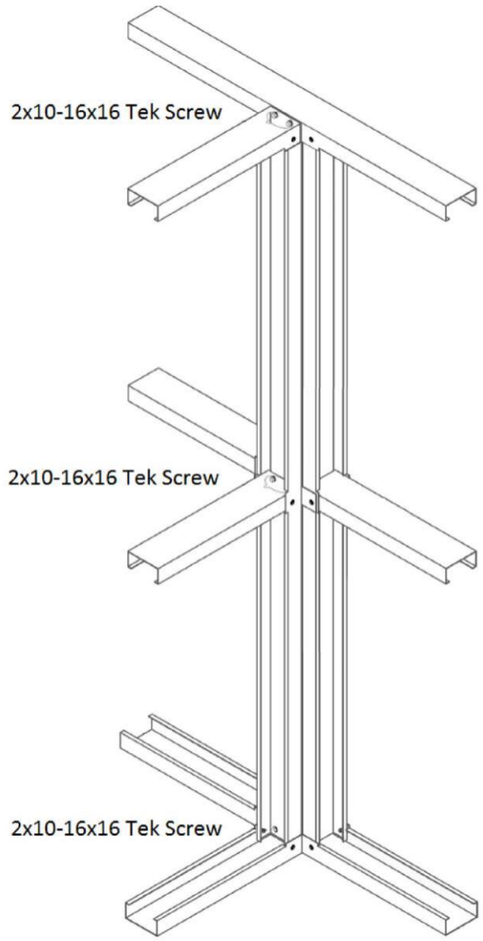

Technical Information

Hold Downs for Scottsdale Light Gauge System

CYCLONE STRAP

The Cyclone Strap is typically used to provide high capacity hold down for both the SCOTRUSS® Roof Truss and SCOTPANEL© system.

Name	Cyclone Strap
Supplier	Simpson, Pryda, Lumberlock
Steel Grade	G350 0.95mm BMT
Use	Rafter Hold Down
Protection	G90/Z275 Galvanizing

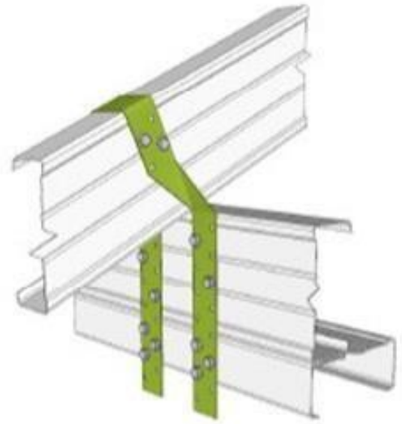

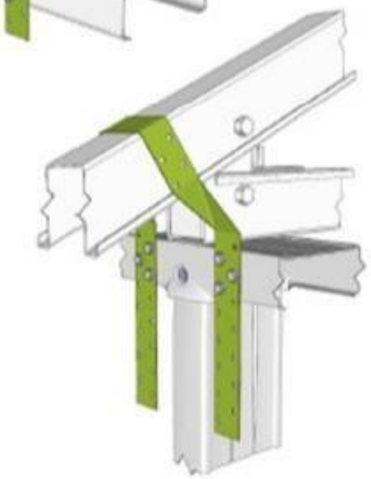

Fixing:

Attach with recommended fasteners. Ensure the correct number of screws are used.

Design Capacities (Up kN)

Wall Properties	No. of Screws	Wall Frame - G550		
		0.55	0.75	0.95
G550	2 & 2	3.08	5.92	8.38
	3 & 3	4.62	8.88	12.57
	4 & 4	6.16	11.83	13.07
	6 & 6	9.23	13.07	13.07

Wall Properties	No. of Screws	Wall Frame - G350		
		0.75	0.95	1.15
G350	2 & 2	5.02	7.16	8.38
	3 & 3	4.62	10.74	12.57
	4 & 4	10.04	13.07	13.07
	6 & 6	13.07	13.07	13.07

RECOMMENDED FASTENERS

HEX HEAD TEK SCREW

10g - 16 x 16mm, HWH. Hex, DP 4.8mm Dia

WAFER HEAD TEK SCREW

10g - 16 x 16mm, Flat. Ph#2, DP 4.8mm Dia

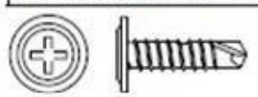

Connection Guide

Hold downs for Scottsdale Light Gauge System

PANEL JOIST — WALL TOP PLATE

Multiple types of brackets can be used. In most cases a bracket applied to a floor joist will primarily be required to provide location stability.

Uplift can be a consideration for floors. When this is the case, screw requirements should be obtained from the data sheets for each bracket.

SHTC

Strap

Twist Tie

MultiGrip

Technical Information

Hold Downs for Scottsdale Light Gauge System

TWIST TIE

The Twist Tie is typically used to provide hold down capacity for the SCOTPANEL© Roof Panel and Floor Joist system. They can be attached in multiple configurations for many situations.

Name	Twist Tie
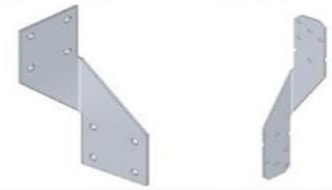	
Supplier	Simpson, Pryda, Lumberlock
Steel Grade	G350 0.95mm BMT
Use	Roof Panel or Floor Joist Hold Down
Protection	G90/Z275 Galvanizing

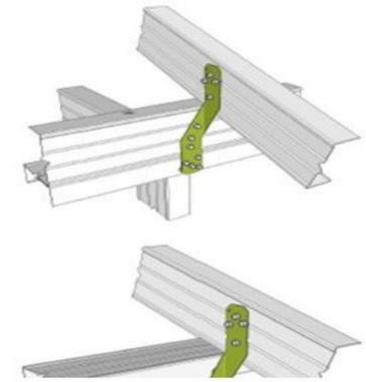

Fixing:
Attach with recommended fasteners. Ensure the correct

Connection Guide

Hold downs for Scottsdale Light Gauge System

SUPPORT FRAME - SUPPORT FRAME

All Brackets are a minimum 0.95mm BMT
Screw requirements are dependant upon connection load.

Brackets can be screwed to web members.

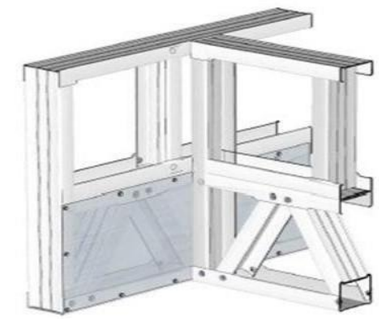

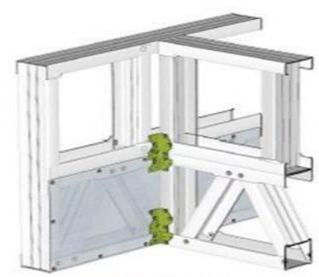

Multi Grip both sides

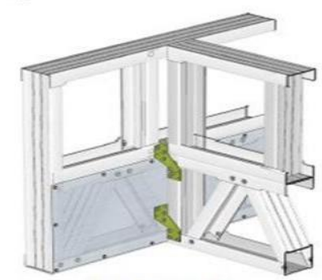

Twist Ties both sides

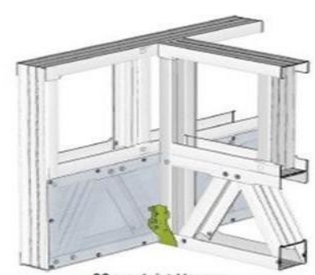

90mm Joist Hanger

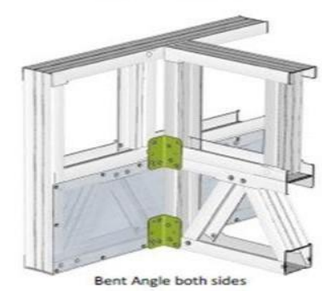

Bent Angle both sides

Technical Information

Hold Downs for Scottsdale Light Gauge System

TWIST TIE

The Twist Tie is typically used to provide hold down capacity for the SCOTPANEL© Roof Panel and Floor Joist system. They can be attached in multiple configurations for many situations.

Name	Twist Tie
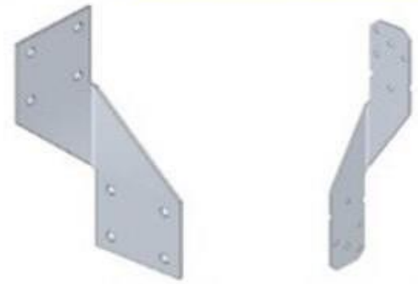	
Supplier	Simpson, Pryda, Lumberlock
Steel Grade	G350 0.95mm BMT
Use	Roof Panel or Floor Joist Hold Down
Protection	G90/Z275 Galvanizing

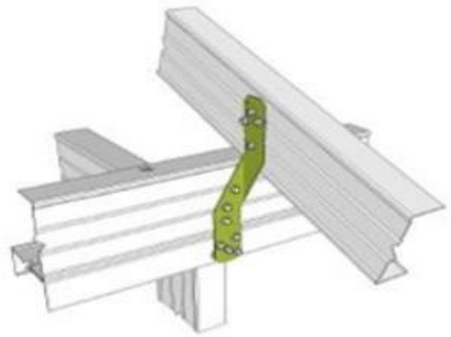

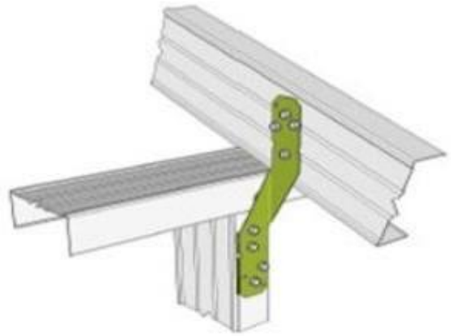

Fixing:

Attach with recommended fasteners. Ensure the correct number of screws are used for the required capacity.

Design Capacities (Uplift kN)

Truss Properties		No. of Screws	Wall Frame - G550		
			0.55	0.75	0.95
G550	0.55	4 & 4	3.08	3.08	3.08
	0.75	4 & 4	3.08	5.92	5.92
	0.95	4 & 4	3.08	5.92	9.18

Truss Properties		No. of Screws	Wall Frame - G350		
			0.75	0.95	1.15
G350	0.75	4 & 4	5.02	5.02	5.02
	0.95	4 & 4	5.02	7.16	7.16
	1.15	4 & 4	5.02	7.16	9.18

RECOMMENDED FASTENERS

HEX HEAD TEK SCREW

10g - 16 x 16mm, HWH. Hex, DP 4.8mm Dia

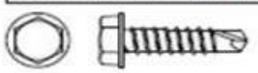

WAFER HEAD TEK SCREW

10g - 16 x 16mm, Flat. Ph#2, DP 4.8mm Dia

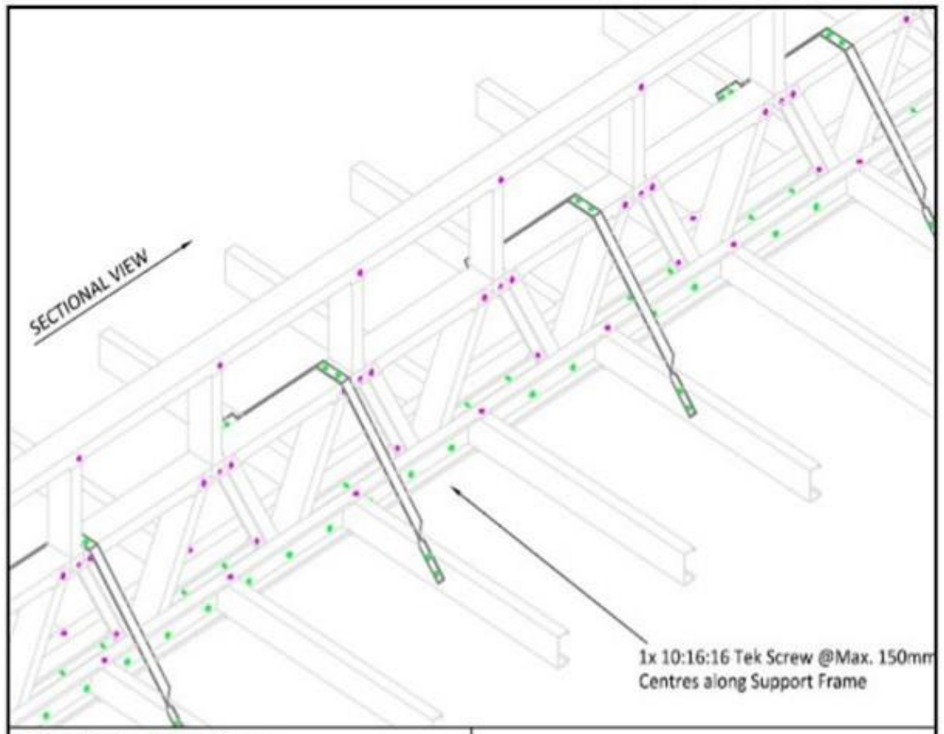

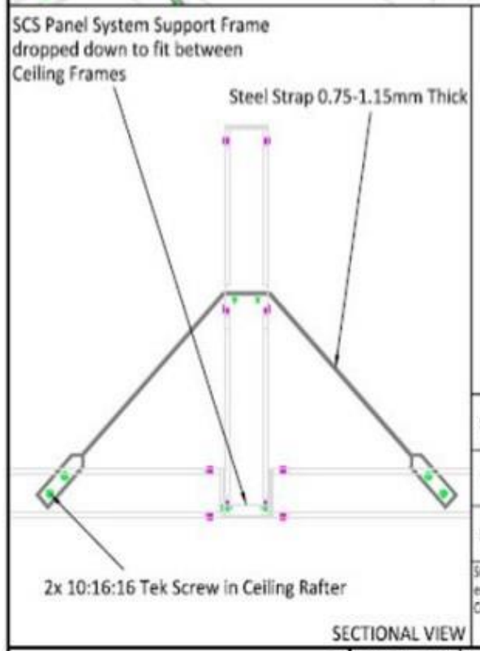

Strap Restraint	30-40mm x 0.75-1.15mm Strap Restraint at Specific Required Centres
Tek Screws	10 x 16 x 16 Hex Tek Screws
Support Beam	SCS Panel System Support Frame

Strap restraints to be inserted at required centres along the Support frame as per engineering requirements.
Ceilings to be fixed to the hanging beam support @ Max. 150mm centres.

Detail Description:

CONNECTION

Ceiling to Support

Scale: N.T.S.

Manuals 01 Working Documents\Info Sheets - for Customers\Construction Info Sheets\Panel\Connection -Ceiling to Support

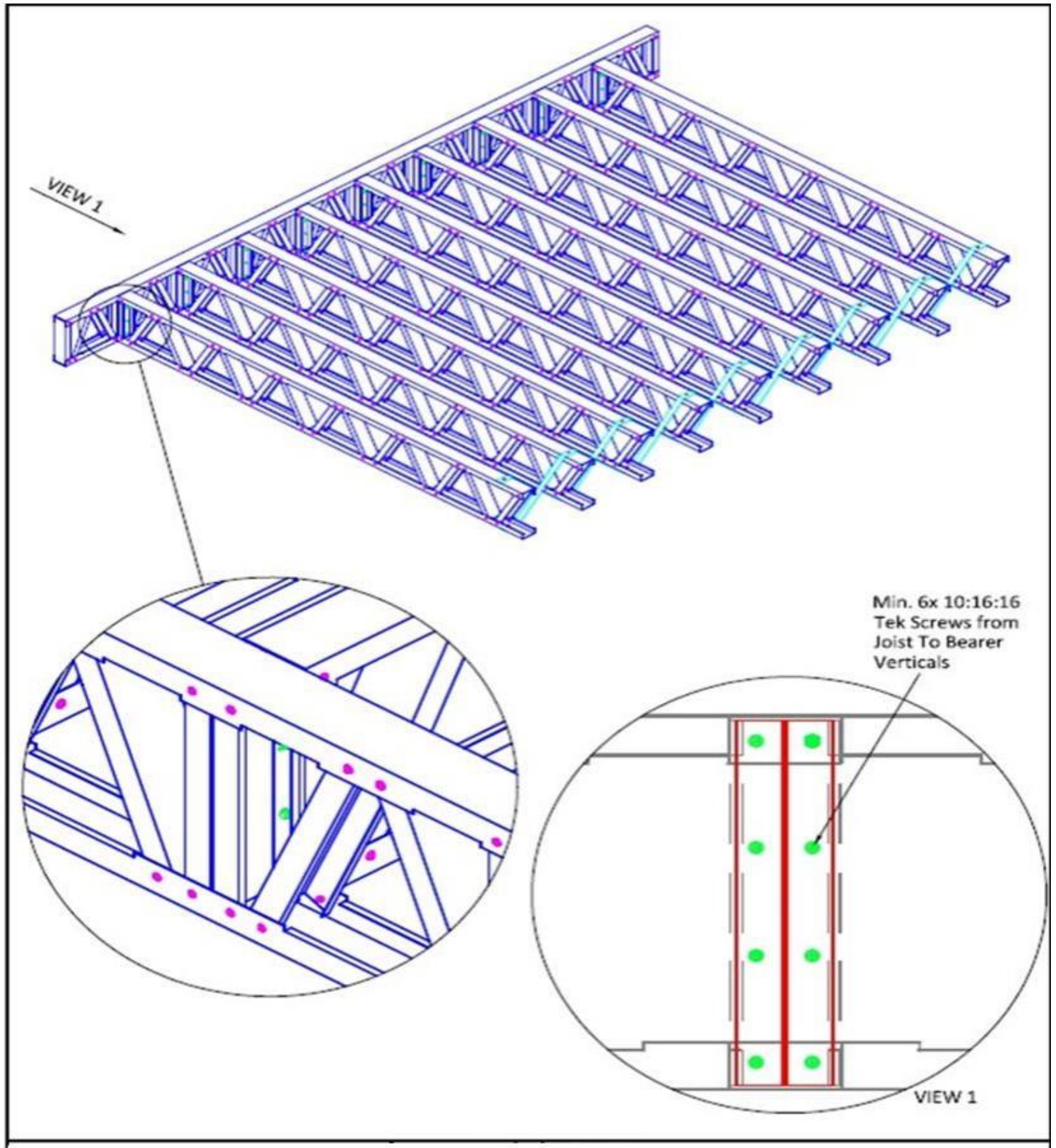

CONNECTION

C Section Floor Joists to Bearer

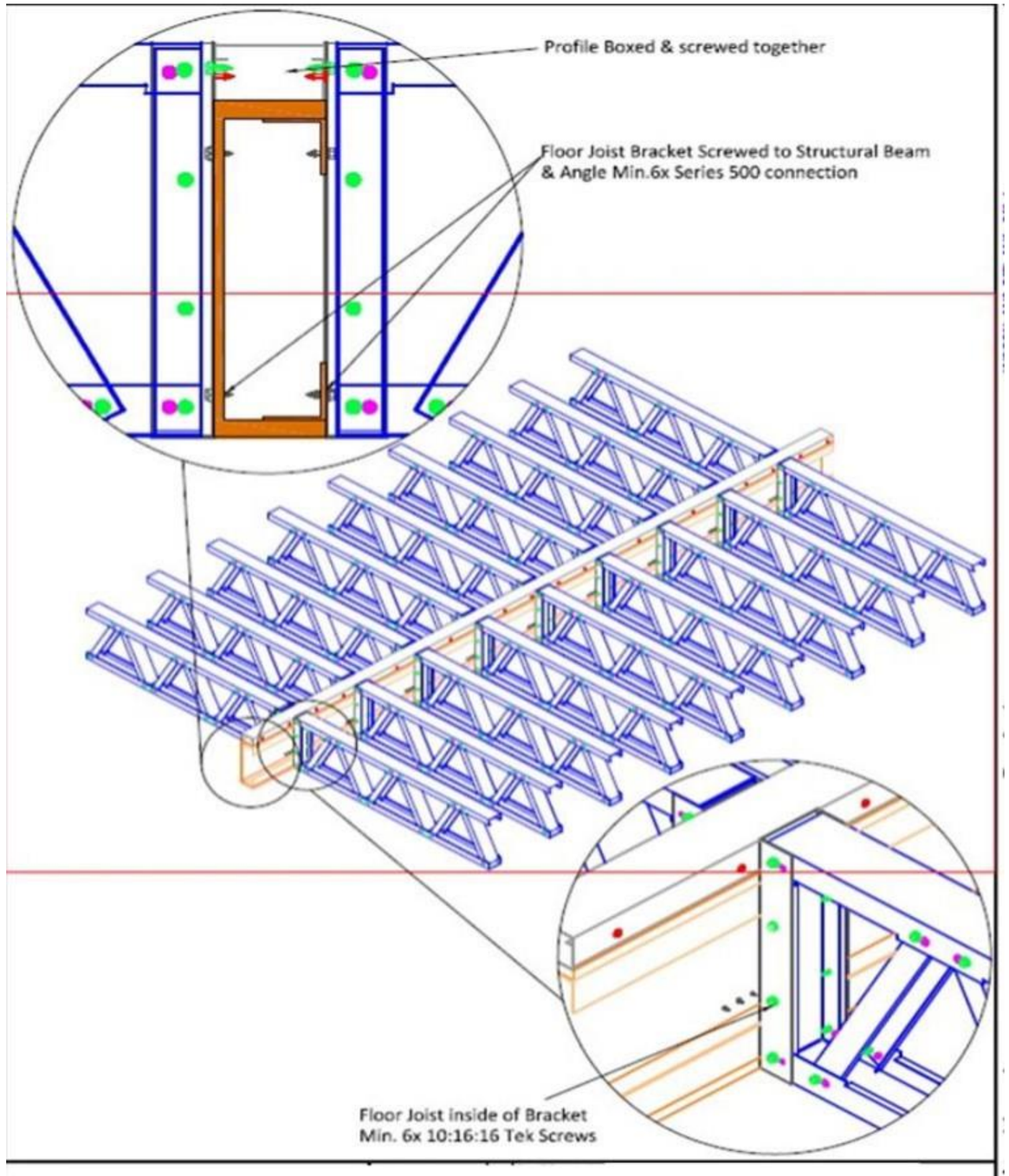

CONNECTION

C-Section Floor Joists to PFC Beam

SPARK Sparkhomes.com.au

WWW.SPARKBUSINESSGROUP.COM.AU

SPARK BUSINESS GROUP PTY LTD
U3,13 McCormack Street
Ardell Park, NSW Tel: 0288 074717

Appendix 8